Appendix E. HAZOP Master P&IDs (Instrument Air, Odourant System and Firewater System Studies)

SBC-001 A/B		
ODORANT STORAGE VESSEL		
DIMENSIONS	mm	754(I.D.) x 907(T/T)
CAPACITY	L	499
HDRO TEST PRESSURE	MPa	3.3
DESIGN TEMPERATURE	°C	65
MATERIAL	-	CARBON STEEL
DESIGN CODE	-	AS 3577

P-001 A/B		
ODORANT PUMP SYSTMES		
MODEL		NIJEX 8300
PROCESS MATERIAL		316 SS
MAX PRESSURE	kPa	9,900
MAX FLOW	LPD	250
DIMENSIONS (APP.)		1,100(W) x 760(D) x 1850(H)

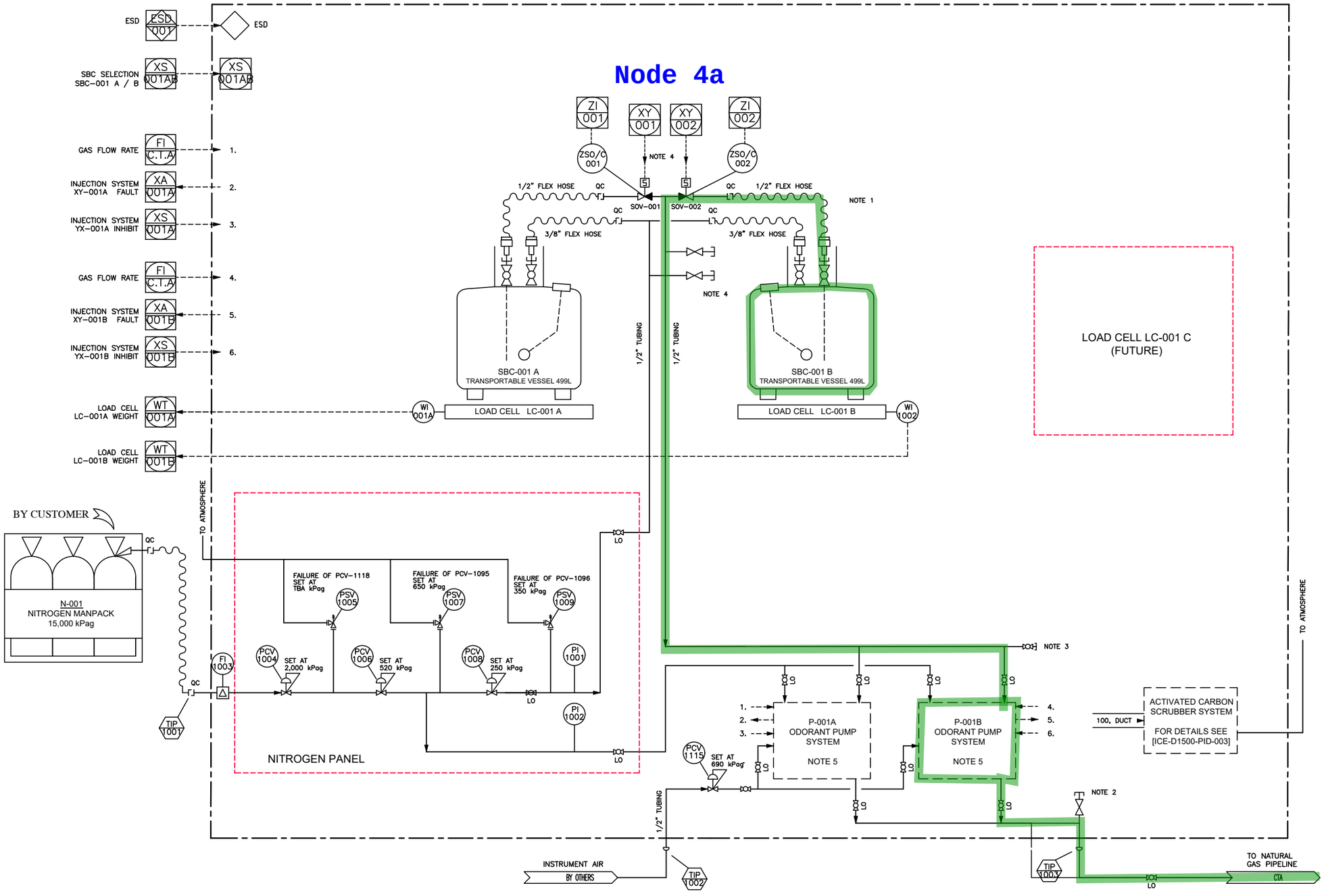

NOTES

1. FLEXIBLE HOSE WITH QUICK CONNECT (QC) FITTINGS.
2. COMMISSIONING TEE.
3. FUTURE BULK LIQUID STORAGE CONNECTION.
4. CONNECTIONS FOR FUTURE THIRD SBC. TO BE PLUGGED
5. FOR DETAILS SEE KGT-ICE-ORF-PRO-PID-0002; P&ID FOR ODORANT PUMP SYSTEM.

HOLDS

LEGEND

- ESD
- LCP INPUT / OUTPUT
- REMOTE DCS INPUT/OUTPUT
- PROCESS LINE
- ELECTRICAL
- COMMUNICATION
- PRESSURE TAPING POINT

THIS DRAWING, AND THE INFORMATION AND DETAILS CONTAINED IN IT ARE CONFIDENTIAL AND ARE THE PROPERTY OF ICE (HEXTAR GROUP). ANY USE MUST BE AUTHORISED BY ICE.

REV.	DATE	DESCRIPTION	DRWN.	CHKD.	APPD.
A	03/11/22	ISSUED FOR HAZOP	G.M.	C.U.	B.A.C.

PROJECT NAME: PORT KEMBLA GAS TERMINAL

DOCUMENT TITLE: P&ID FOR ODORANT INJECTION PACKAGE

AIE DOC. NO.: PKGT-ICE-ORF-PRO-PID-0001

ICE DOC. NO.: ICE-D1500-PID-001

PROJECT No: D1500 | CUSTOMER REF. NO.: -- | SCALE: NTS | REV: A

554-E-018001
PIG LAUNCHER
SIZE MAJOR/MINOR: DN600xDN450
DESIGN PRESSURE: 15.32 MPag
DESIGN TEMPERATURE: -10°C/65°C
MATERIAL: CS

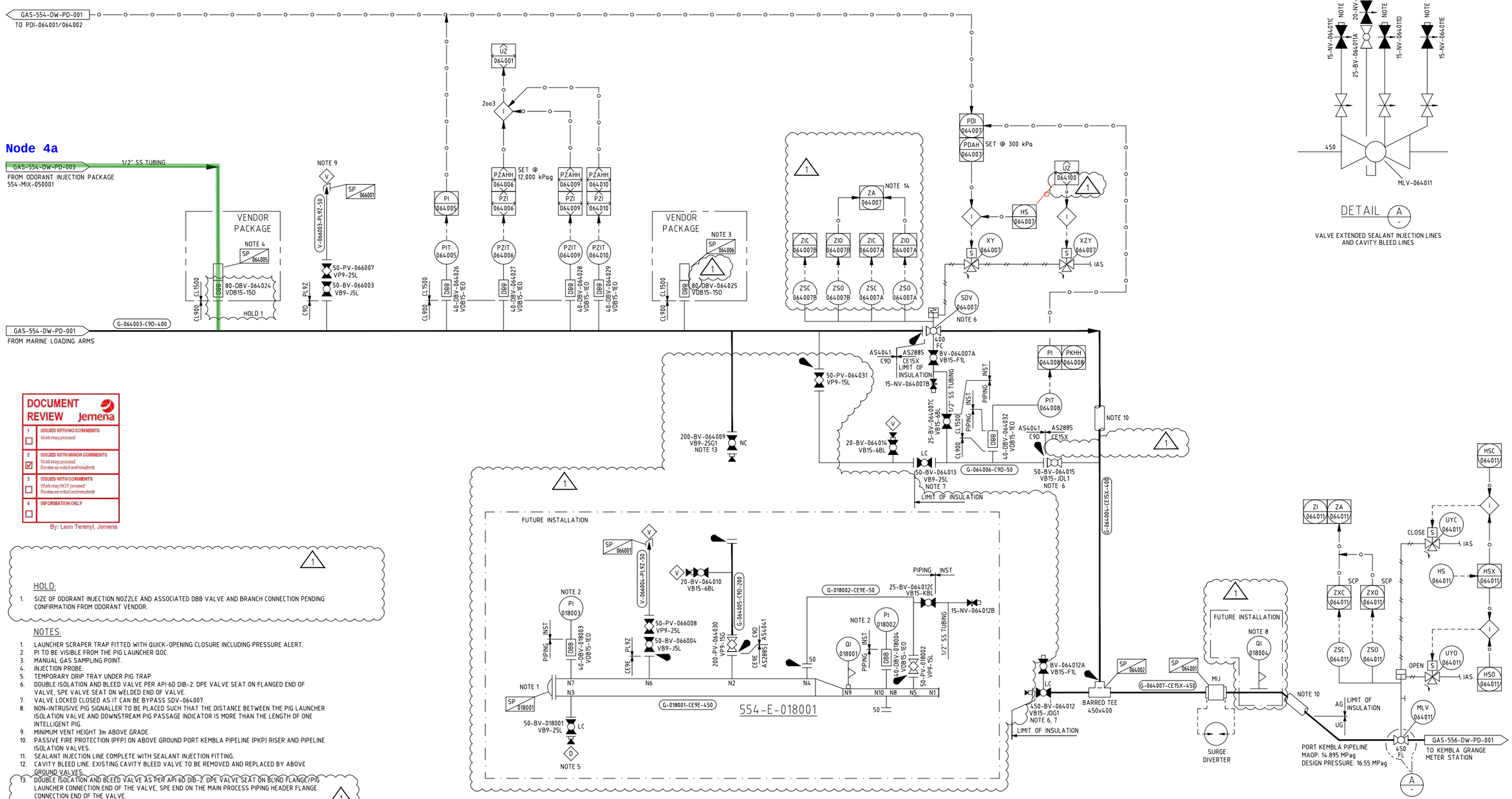

DOCUMENT REVIEW Jemena

1	☐	ISSUED WITH NO COMMENTS Work may proceed
2	☑	ISSUED WITH MINOR COMMENTS Work may proceed Revise as noted and resubmit
3	☐	ISSUED WITH COMMENTS Work may NOT proceed Revise as noted and resubmit
4	☐	INFORMATION ONLY

By: Leon Teremyi, Jemena

1

HOLD:

1. SIZE OF ODORANT INJECTION NOZZLE AND ASSOCIATED DBB VALVE AND BRANCH CONNECTION PENDING CONFIRMATION FROM ODORANT VENDOR.

NOTES:

1. LAUNCHER SCRAPER TRAP FITTED WITH QUICK-OPENING CLOSURE INCLUDING PRESSURE ALERT.
2. PI TO BE VISIBLE FROM THE PIG LAUNCHER QOC.
3. MANUAL GAS SAMPLING POINT.
4. INJECTION PROBE.
5. TEMPORARY DRIP TRAY UNDER PIG TRAP.
6. DOUBLE ISOLATION AND BLEED VALVE PER API 6D DIB-2. DPE VALVE SEAT ON FLANGED END OF VALVE, SPE VALVE SEAT ON WELDED END OF VALVE.
7. VALVE LOCKED CLOSED AS IT CAN BE BYPASS SDV-064007.
8. NON-INTRUSIVE PIG SIGNALLER TO BE PLACED SUCH THAT THE DISTANCE BETWEEN THE PIG LAUNCHER ISOLATION VALVE AND DOWNSTREAM PIG PASSAGE INDICATOR IS MORE THAN THE LENGTH OF ONE INTELLIGENT PIG.
9. MINIMUM VENT HEIGHT 3m ABOVE GRADE.
10. PASSIVE FIRE PROTECTION (PFP) ON ABOVE GROUND PORT KEMBLA PIPELINE (PKP) RISER AND PIPELINE ISOLATION VALVES.
11. SEALANT INJECTION LINE COMPLETE WITH SEALANT INJECTION FITTING.
12. CAVITY BLEED LINE. EXISTING CAVITY BLEED VALVE TO BE REMOVED AND REPLACED BY ABOVE GROUND VALVES.
13. DOUBLE ISOLATION AND BLEED VALVE AS PER API 6D DIB-2. DPE VALVE SEAT ON BLIND FLANGE/PIG LAUNCHER CONNECTION END OF THE VALVE, SPE END ON THE MAIN PROCESS PIPING HEADER FLANGE CONNECTION END OF THE VALVE.
14. REFER PKGT FUNCTIONAL DESCRIPTION GAS-554-SP-JJ-001 FOR TRIP LOGIC.

1

No	BY	CHKD	ENG	Q.A.	PROJ
1	JPR	SJH	PJB	NKH	210275

GPA ENGINEERING Q.A

DRAWING No.	REFERENCE DRAWINGS
GAS-554-DW-PD-001	PORT KEMBLA GAS TERMINAL HP GAS TRANSFER P&ID
GAS-554-DW-PD-003	PORT KEMBLA GAS TERMINAL ODORANT INJECTION P&ID

ASSET MANAGER
Jemena
Produced by
Jemena Asset Management (6) Pty Ltd
ABN 52 104 352 650

ASSET OWNER
Jemena
Jemena EGP(1) P/L
ABN 15 068 570 847
Jemena EGP(2) P/L
ABN 77 006 919 115

COPYRIGHT.
THIS DRAWING AND THE INFORMATION ON THIS DRAWING (MATERIAL) ARE PROTECTED BY THE COPYRIGHT LAWS OF AUSTRALIA. ALL RIGHTS ARE RESERVED. NO PART OF THE MATERIAL MAY IN ANY FORM BE REPRODUCED (IN WHOLE OR IN PART) OR MODIFIED IN ANY WAY WITHOUT THE EXPRESS PRIOR PERMISSION OF JEMENA LIMITED.

REV	DATE	DESCRIPTION	DRAWN	CHECKED	APPRV	CLIENT
1	08/06/22	ISSUED FOR CONSTRUCTION (210275)	GPA	SJH	NKH	
0	16/03/22	ISSUED FOR CONSTRUCTION (210275)	GPA	SJH	NKH	

CONSULTANT
GPA
www.gpaeng.com.au

PORT KEMBLA GAS TERMINAL
PIG LAUNCHER
PIPING & INSTRUMENTATION DIAGRAM

DRAWN	GPA	FACILTY	554	SUBJECT	PD
DESIGN	DP	SCALE		N.T.S.	
CHECKED	SJH	SUPERSEDES			A1
APPROVED	NKH	DRAWING NUMBER			REV 1
DATE	16/03/22	GAS-554-DW-PD-002			

Node 4a

P-001 A/B	
ODORANT PUMP SYSTMES	
MODEL	NIJEX 8300
PROCESS MATERIAL	316 SS
MAX PRESSURE kPa	9,900
MAX FLOW LPD	250
DIMENSIONS (APP.)	1,100(W) x 760(D) x 1850(H)

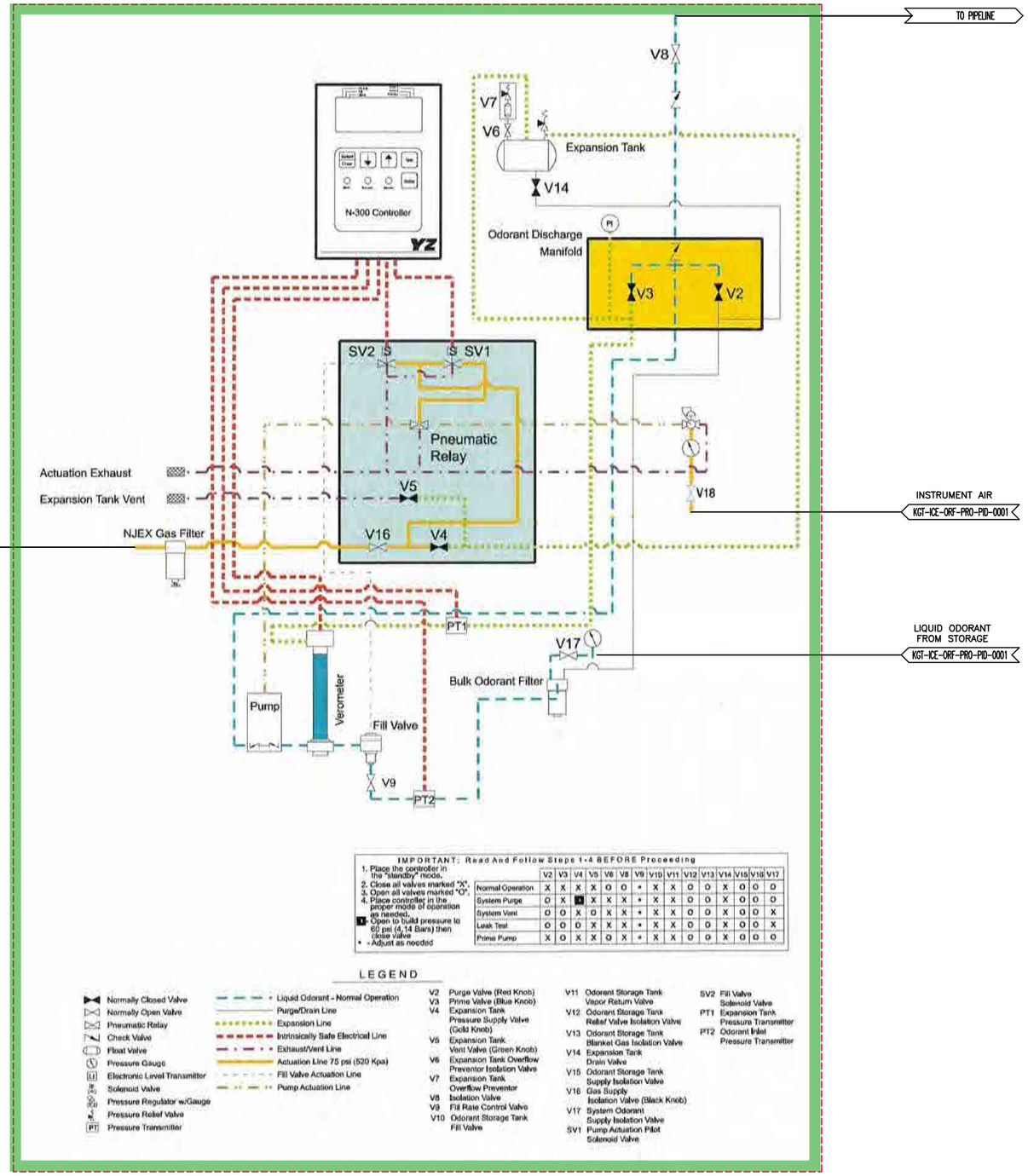

IMPORTANT: Read And Follow Steps 1-4 BEFORE Proceeding

1. Place the controller in the "standby" mode.
2. Close all valves marked "X".
3. Open all valves marked "O".
4. Place controller in the proper mode of operation as needed.
   - 1 - Open to build pressure to 60 psi (4.14 Bars) then close valve
   - * - Adjust as needed

	V2	V3	V4	V5	V6	V8	V9	V10	V11	V12	V13	V14	V15	V16	V17
Normal Operation	X	X	X	X	O	O	*	X	X	O	O	X	O	O	O
System Purge	O	X	1	X	X	X	*	X	X	O	O	X	O	O	O
System Vent	O	O	X	O	X	X	*	X	X	O	O	X	O	O	X
Leak Test	O	O	O	X	X	X	*	X	X	O	O	X	O	O	X
Prime Pump	X	O	X	X	O	X	*	X	X	O	O	X	O	O	O

LEGEND

- Normally Closed Valve
- Normally Open Valve
- Pneumatic Relay
- Check Valve
- Float Valve
- Pressure Gauge
- Electronic Level Transmitter
- Solenoid Valve
- Pressure Regulator w/Gauge
- Pressure Relief Valve
- PT Pressure Transmitter
- Liquid Odorant - Normal Operation
- Purge/Drain Line
- Expansion Line
- Intrinsically Safe Electrical Line
- Exhaust/Vent Line
- Actuation Line 75 psi (520 Kpa)
- Fill Valve Actuation Line
- Pump Actuation Line

V2 Purge Valve (Red Knob)
V3 Prime Valve (Blue Knob)
V4 Expansion Tank Pressure Supply Valve (Gold Knob)
V5 Expansion Tank Vent Valve (Green Knob)
V6 Expansion Tank Overflow Preventor Isolation Valve
V7 Expansion Tank Overflow Preventor
V8 Isolation Valve
V9 Fill Rate Control Valve
V10 Odorant Storage Tank Fill Valve
V11 Odorant Storage Tank Vapor Return Valve
V12 Odorant Storage Tank Relief Valve Isolation Valve
V13 Odorant Storage Tank Blanket Gas Isolation Valve
V14 Expansion Tank Drain Valve
V15 Odorant Storage Tank Supply Isolation Valve
V16 Gas Supply Isolation Valve (Black Knob)
V17 System Odorant Supply Isolation Valve
SV1 Pump Actuation Pilot Solenoid Valve
SV2 Fill Valve Solenoid Valve
PT1 Expansion Tank Pressure Transmitter
PT2 Odorant Inlet Pressure Transmitter

NOTES

1. MAIN / STANDBY SYSTEMS PROVIDED

HOLDS

THIS DRAWING, AND THE INFORMATION AND DETAILS CONTAINED IN IT ARE CONFIDENTIAL AND ARE THE PROPERTY OF ICE (HEXTAR GROUP). ANY USE MUST BE AUTHORISED BY ICE.

REV.	DATE	DESCRIPTION	DRWN.	CHKD.	APPD.
A	03/11/22	ISSUED FOR HAZOP	G.M.	K.W.	B.A.C

PROJECT NAME: PORT KEMBLA GAS TERMINAL

DOCUMENT TITLE: P&ID FOR ODORANT PUMP SYSTEM

AIE DOC. NO.: PKGT-ICE-ORF-PRO-PID-0002

ICE DOC. NO.: ICE-D1500-PID-002

PROJECT No	CUSTOMER REF. NO.:	SCALE:	REV
D1500	--	NTS	A

F-001 A/B/C		
ACTIVATED CARBON FILTERS		
QUANTITY	-	3
CAPACITY	m3	0.215
DESIGN PRESSURE	kPag	90
DESIGN TEMPERATURE	°C	AMBIENT
MATERIAL	-	SS 304

K-001		
EXHAUST FAN		
DESIGN PRESSURE	kPag	7.5
DESIGN TEMPERATURE	°C	AMBIENT
MATERIAL	-	CARBON STEEL
CAPACITY	CFM	350
MOTOR DUTY	kW	4

Node 4b

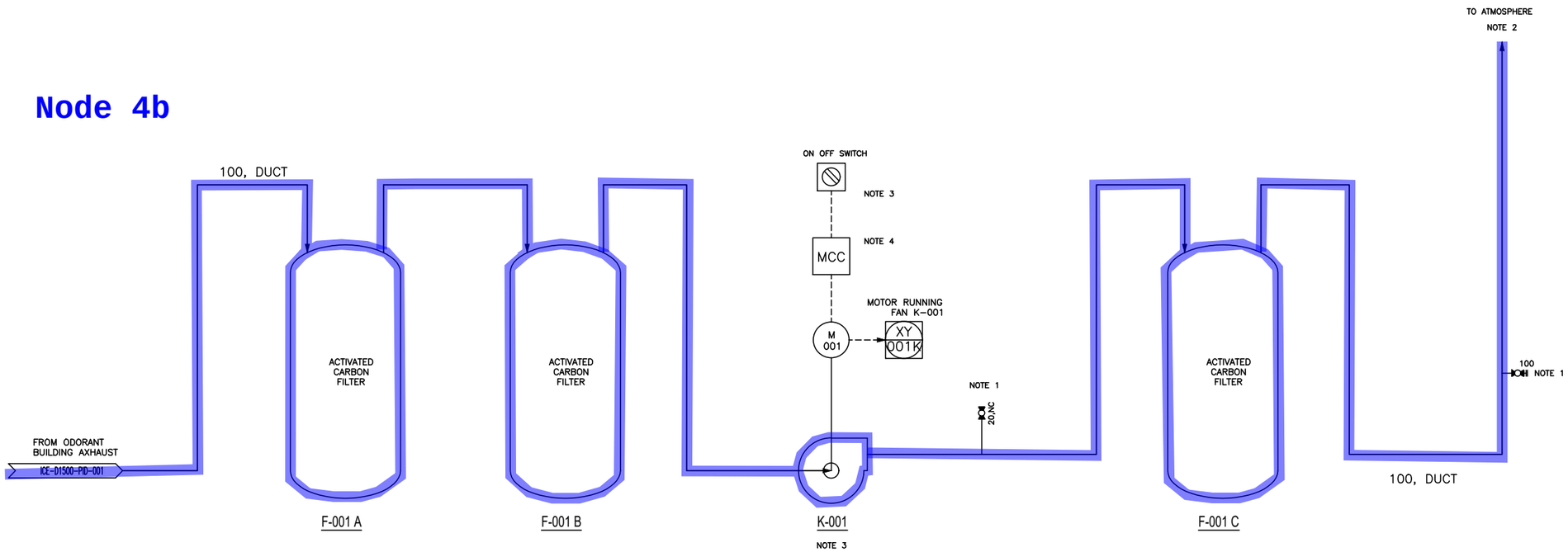

NOTES

1. SAMPLING AND INSPECTION POINTS.
2. EXHAUST POINT GREATER THAN 3m ABOVE GROUND GREATER THAN 2M FROM ANY BUILDING OPENING.
3. LOCAL SWITCH FAN START / STOP
4. LOCAL MCC.

HOLDS

THIS DRAWING, AND THE INFORMATION AND DETAILS CONTAINED IN IT ARE CONFIDENTIAL AND ARE THE PROPERTY OF ICE (HEXTAR GROUP). ANY USE MUST BE AUTHORISED BY ICE.

REV.	DATE	DESCRIPTION	DRWN.	CHKD.	APPD.
A	03/11/22	ISSUED FOR HAZOP	MM	K.W.	B.A.C

PROJECT NAME: PORT KEMBLA GAS TERMINAL

DOCUMENT TITLE: P&ID FOR ACTIVATED CARBON SYSTEM

AIE DOC. NO.: PKGT-ICE-ORF-PRO-PID-0003

ICE DOC. NO.: ICE-D1500-PID-003

PROJECT No	CUSTOMER REF. NO.:	SCALE:	REV
D1500	--	NTS	A

NOTES:

1. UNDERGROUND/ABOVEGROUND TRANSITION PIPES AND FLANGES TO BE ADEQUATELY COATED.
2. ABOVEGROUND PIPING TO BE MINIMISED TO ENSURE SAFETY SHOWER WATER TEMPATURE <38°C. INSULATION WILL BE ADDED ON ABOVE GROUND SAFETY SHOWER PIPING EXPOSED TO SOLAR RADIATION.
3. ANTI-SCALD VALVE WILL AUTOMATICALLY BLEED HOT WATER TO SAFE LOCATION.
4. WHERE BUTTERFLY VALVES ARE REQUIRED FOR RF FLANGE CONNECTION, THEY SHALL BE FULLY LUGGED TYPE.
5. BACKFLOW PREVENTION DEVICE, DOUBLE CHECK VALVES, MATERIALS, DESIGN AND PERFORMANCE REQUIREMENTS SHALL BE IN ACCORDANCE WITH AS 2845.1

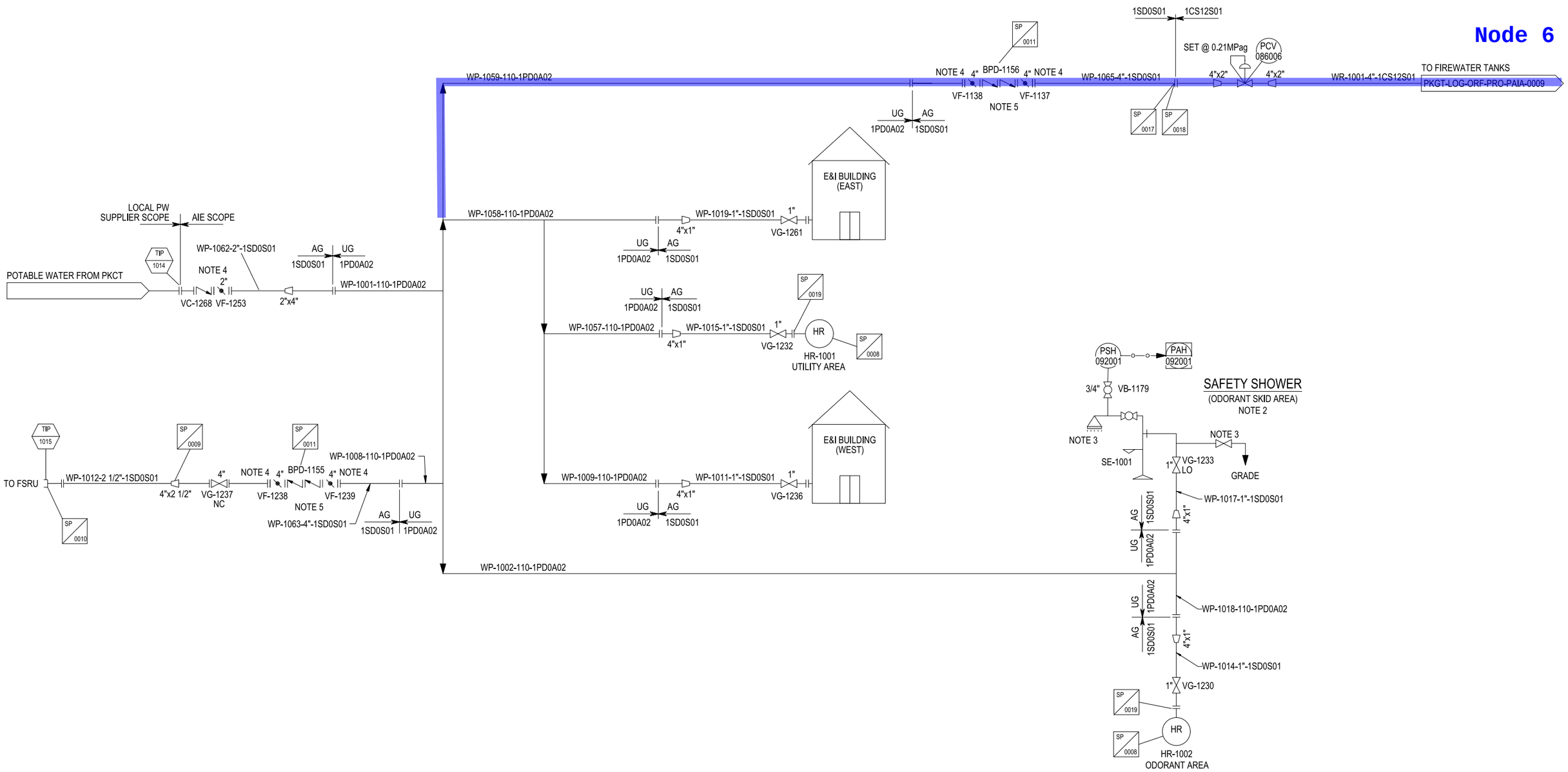

DOC No.	DESCRIPTION	REV No	DATE	DESCRIPTION	DRN	CHK'D	DSG'D	DSGCHK	PM APP
		0	09/08/22	ISSUED FOR USE	ISS	BAC	NGL	LAA	CJS

REFERENCE DOCUMENTS — REVISIONS

CLIENT: AIE

LOGICAMMS a verbrec company

THIS DRAWING AND DESIGN CONTAINS PROPRIETARY INFORMATION. IT SHALL NOT BE USED OR REPRODUCED OR ANY OF ITS CONTENTS DISCLOSED IN WHOLE OR PART WITHOUT PRIOR WRITTEN CONSENT OF LOGICAMMS LTD. © LogiCamms

DRG No.

SCALE:	NTS	
DRAWN	ISS	09/08/22
CHECKED	BAC	09/08/22
DESIGNED	NL	09/08/22
DES. CHECK	LAA	09/08/22
PROJ. MGR	CJS	09/08/22
CLIENT		

PORT KEMBLA GAS TERMINAL DETAILED DESIGN
WHARF TOPSIDE
POTABLE WATER
PIPING AND INSTRUMENTATION DIAGRAM

A1 — DRG. No. PKGT-LOG-ORF-PRO-PAIA-0011 — Rev 0

Dwg name: L:\Projects\EAST-BNE\41-82198.00 - AIE Port Kembla ORF Design\15 Drafting & Design\02 Drawings\02 Process\PID\PKGT-LOG-ORF-PRO-PAIA-0011_0.dwg | User: daniel.kim | Plot time: 09-08-22 @ 1:17pm

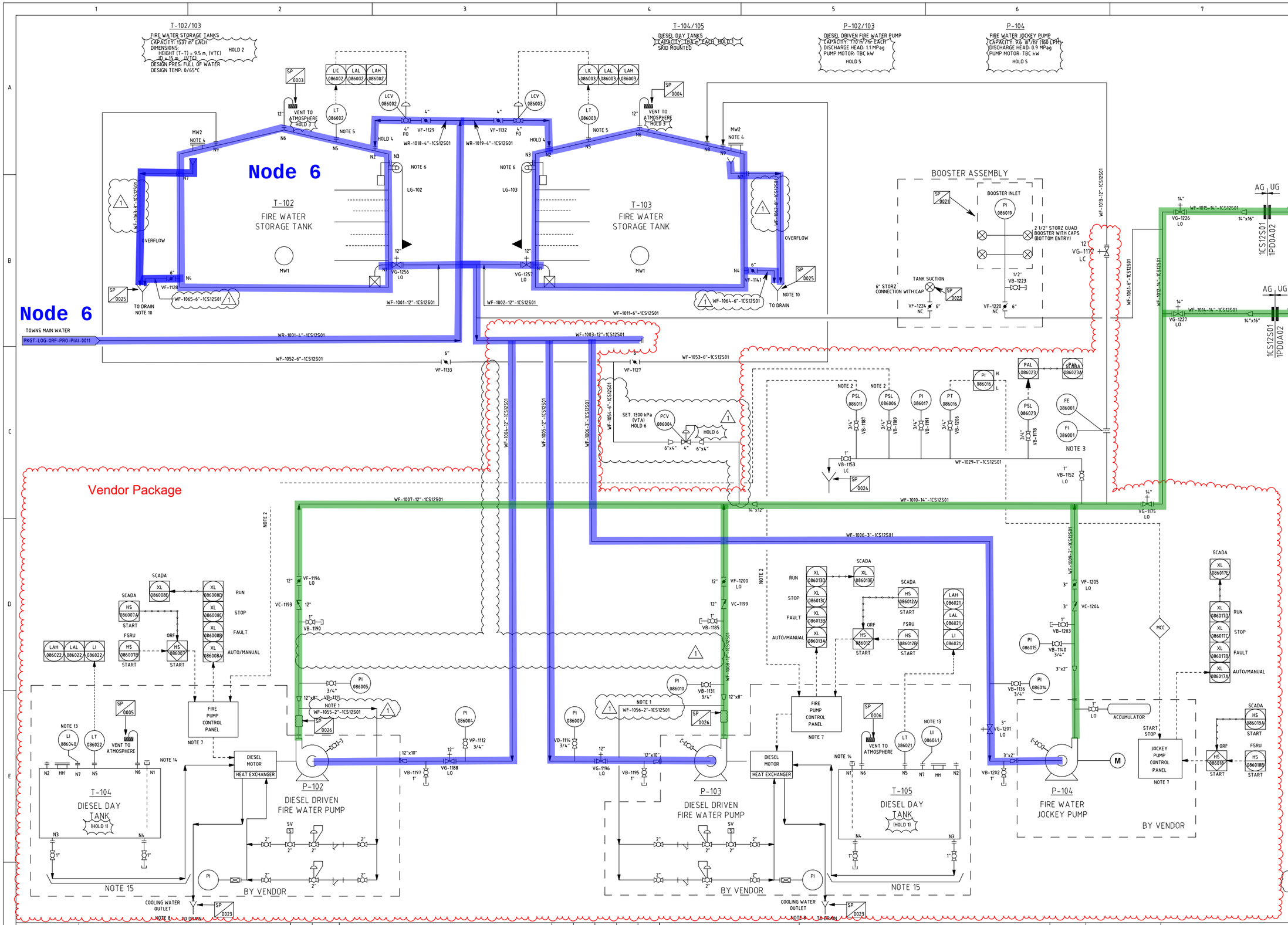

NOTES:

1. FLOW LINE FOR ENGINE COOLING.
2. TO BE SUPPLIED AND INSTALLED BY PUMP VENDOR.THE SIZE IS PRELIMINARY.
3. FLOWMETER AND INDICATOR TO BE SUPPLIED AS LOOSE ITEM BY PUMP VENDOR.
4. THE TANK WILL BE SUPPLIED WITH AN ACCESS HATCH ON THE TOP WITH COMPLIANT LADDERS AND PLATFORMS.
5. RADAR TYPE LEVEL TRANSMITTER.THE GAUGE'S FLANGE SHALL BE LOCATED IN A SAFE LOCATION AND ACCESSIBLE FROM THE PLATFORM SAFELY FOR MAINTENANCE. RADAR LEVEL TRANSMITTER SHOULD BE LOCATED SUCH THAT THERE IS A CLEAR MEASUREMENT PATH.
6. EACH TANK SHALL BE FITTED WITH AN EXTERNAL INDICATOR TO SHOW THE TANK WATER LEVEL.
7. WHEN PRESSURE OF FIRE WATER RING DROPS TO 750 kPa, JOCKEY PUMP P-104 SHALL START AUTOMATICALLY. IF PRESSURE INCREASES TO 950 kPa, IT SHALL STOP AUTOMATICALLY. THE FIRST FIRE PUMP P-102 SHALL START IF THE PRESSURE DROPS TO 700 kPa. IF THE PRESSURE WILL NOT RAISE TO 700 kPa WITHIN 20 SECONDS, THE SECOND FIRE PUMP P-103 SHALL START AUTOMATICALLY.
8. DISCHARGE PIPING OUT OF PUMP SKID TO BE DONE BY PIPING CONTRACTOR. THE DISCHARGE TO BE VISIBLE AND SUITABLE FOR ANNUAL RAW TESTING.
9. FUEL TANKS SHALL BE SUPPLIED WITH 20% EXCESS CAPACITY OF AS2941 REQUIREMENTS.
10. THE OVERFLOW DISCHARGE SHALL BE VISIBLE.
11. THE VENDOR SCOPE IS SHOWN AS PRELIMINARY. REFER TO VENDOR DRAWINGS AND SPECIFICATION FOR FINAL VENDOR DESIGN.
12. FIRE SERVICE INSTALLATION TO COMPLY WITH AS2419.1:2021, AS2941:2013 AND AS2304:2019.
13. LEVEL INDICATOR TO BE VISIBLE FROM TANK FILLING LOCATION.
14. TANK'S INLET NOZZLE TO BE USED FOR MANUAL FILLING VIA DIESEL TRUCK'S HOSE FUEL DISPENSER.
15. DRIP TRAY FOR DIESEL TANKS.

HOLDS:

1. THE CAPACITY TO BE ADVISED BY VENDOR.
2. TANKS DIMENSIONS TO BE ADVISED BY VENDOR.
3. SIZE OF VENT TO BE CONFIRMED BY VENDOR.
4. ALL NOZZLES' SIZES TO BE CONFIRMED BY TANK VENDOR.
5. PUMP MOTOR SIZE TO BE CONFIRMED ONCE VENDOR IS SELECTED.
6. SET PRESSURE AND SIZE OF PCV TO BE CONFIRMED ONCE FIRE PUMP VENDOR SELECTED.
7. DELETED.

DOC No.	DESCRIPTION	REV No	DATE	DESCRIPTION	DRN	CHK'D	DSG'D	DSGCHK	PM APP
REFERENCE DOCUMENTS		REVISIONS							
		1	08/09/22	RE-ISSUED FOR USE	BAC	ISS	NGL	LAA	CJS
		0	09/08/22	ISSUED FOR USE	ISS	BAC	NGL	LAA	CJS

CLIENT:

AIE

LOGICAMMS a verbrec company

© THIS DRAWING AND DESIGN CONTAINS PROPRIETARY INFORMATION. IT SHALL NOT BE USED OR REPRODUCED OR ANY OF ITS CONTENTS DISCLOSED IN WHOLE OR PART WITHOUT PRIOR WRITTEN CONSENT OF LOGICAMMS LTD.

DRG No.

SCALE:	NA	
DRAWN	ISS	09/08/22
CHECKED	BAC	09/08/22
DESIGNED	NL	09/08/22
DES. CHECK	LAA	09/08/22
PROJ. MGR	CJS	09/08/22
CLIENT		

PORT KEMBLA GAS TERMINAL DETAILED DESIGN
WHARF TOPSIDE
FIREWATER PUMPS AND STORAGE TANKS
PIPING AND INSTRUMENTATION DIAGRAM

A1 DRG. No. PKGT-LOG-ORF-PRO-PAIA-0009 Rev 1

Dwg name: \\logicamms.internal\LCM\Projects\EAST-BNE\41-82198.00 - AIE Port Kembla ORF Design\15 Drafting & Design\02 Drawings\02 Process\PID\PKGT-LOG-ORF-PRO-PAIA-0009_1.dwg | User: Ian.Solomon | Plot time: 08-09-22 @ 1:53pm

NOTES:

1. ALL HYDRANTS TO BE DUAL OUTLET TYPE WITH STORZ CONNECTION AND PRESSURE RELIEF HOLE.
2. THE FIRE MONITORS CAN BE REMOTELY CONTROLLED VIA SCADA (JEMENA CONTROL ROOM AND ORF EMERGENCY CONTROL ROOM) AND VIA TWO MOBILE WIRELESS CONTROLLERS.
3. MANUAL AIR VENT TO BE INSTALLED AT HIGH POINT.
4. THE VENDOR SCOPE IS SHOWN AS PRELIMINARY. REFER TO VENDOR DRAWINGS AND SPECIFICATIONS FOR FINAL DESIGN.
5. ALL VALVES SHALL BE SO LOCATED AS READY ACCESS.
6. BOLLARDS SHALL BE INSTALLED FOR FIRE FIGHTING EQUIPMENT WHERE THERE IS A POSSIBILITY OF DAMAGE BY TRAFFIC.
7. FIRE SERVICE INSTALLATION TO COMPLY WITH AS 2419.1:2021.
8. ISOLATION VALVES ARE TO BE INSTALLED IN HEAVY-DUTY PATH BOX SUITABLE FOR VEHICULAR TRAFFIC. IT SHALL BE LABELED TO INDICATE THE VALVE NUMBER AND TYPE OF SERVICE.
9. THE LINE TO BE FLUSHED WITH TOWN WATER AFTER DISCONNECTING FROM THE SHIP.

HOLDS:

1. THE CONTROL SYSTEM ON THIS P&ID WILL BE UPDATED ONCE VENDOR IS SELECTED AND DETAILS CONFIRMED.

SMO-101/2
FIRE MONITOR TOWERS

FM-101/2
REMOTE FIRE MONITOR
DESIGN FLOW : 6,400 L/M @ 0.7 MPag

FH-101~6
FIRE HYDRANT
DUAL OUTLET TYPE
DESIGN FLOW : 600 L/M @0.7 MPag
FROM EACH SINGLE OUTLET

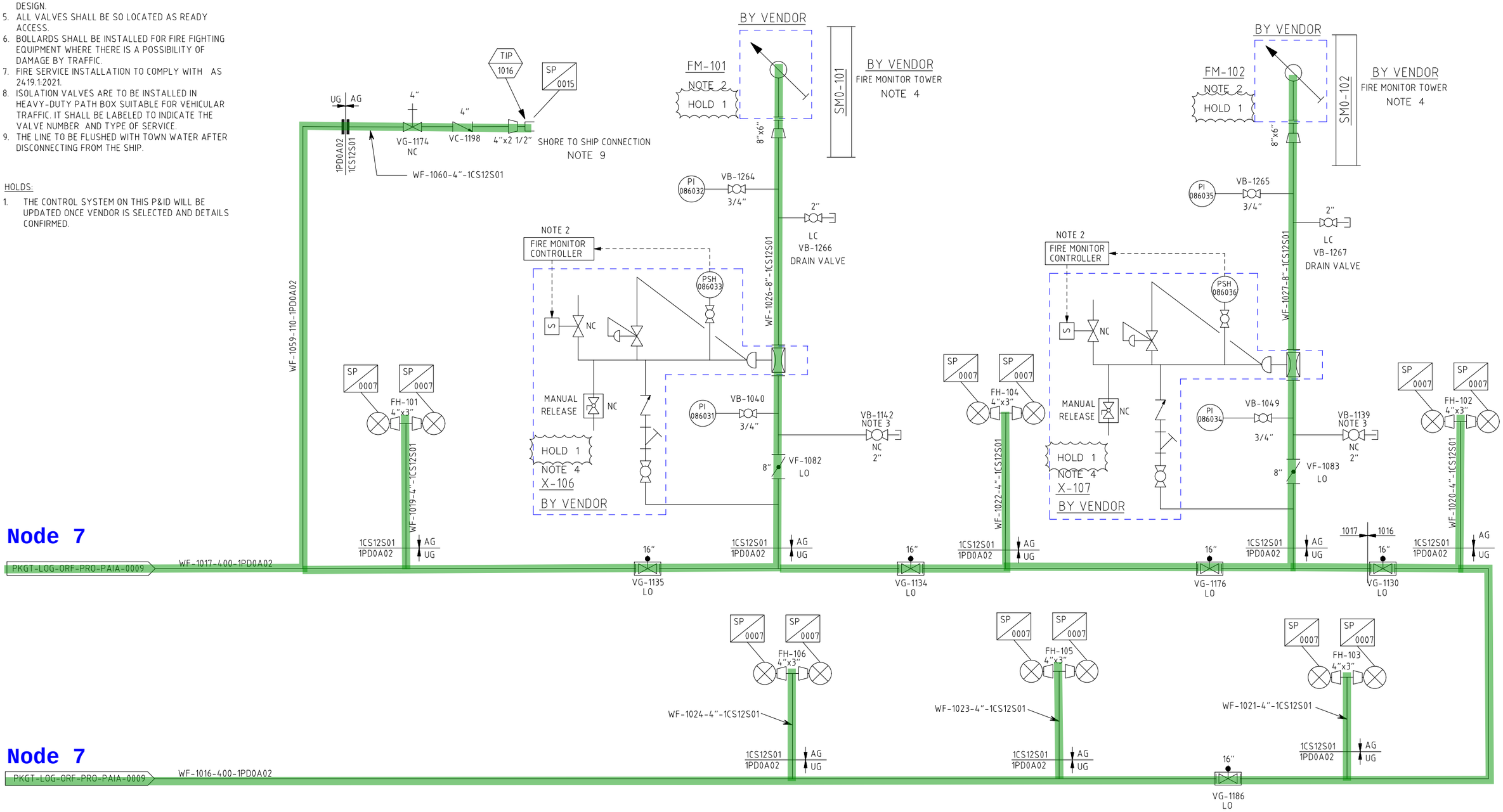

DOC No.	DESCRIPTION	REV No	DATE	DESCRIPTION	DRN	CHK'D	DSG'D	DSGCHK	PM APP
REFERENCE DOCUMENTS		REVISIONS							
		0	09/08/22	ISSUED FOR USE	ISS	BAC	NGL	LAA	CJS

CLIENT:

AIE

LOGICAMMS
a verbrec company

THIS DRAWING AND DESIGN CONTAINS PROPRIETARY INFORMATION. IT SHALL NOT © BE USED OR REPRODUCED OR ANY OF ITS CONTENTS DISCLOSED IN WHOLE OR PART WITHOUT PRIOR WRITTEN CONSENT OF LOGICAMMS LTD.

DRG No.

SCALE:	NA	
DRAWN	ISS	09/08/22
CHECKED	BAC	09/08/22
DESIGNED	NL	09/08/22
DES. CHECK	LAA	09/08/22
PROJ. MGR	CJS	09/08/22
CLIENT		

PORT KEMBLA GAS TERMINAL DETAILED DESIGN
WHARF TOPSIDE
FIREWATER MAIN RING, FIRE MONITORS AND HYDRANTS
PIPING AND INSTRUMENTATION DIAGRAM

A1 DRG. No. PKGT-LOG-ORF-PRO-PAIA-0010 Rev 0

NOTES:

1. FLOWMETER AND INDICATOR ARE SUPPLIED LOOSE.
2. FUEL TANKS SHALL BE SUPPLIED WITH 20% EXCESS CAPACITY OF AS2941 REQUIREMENTS.

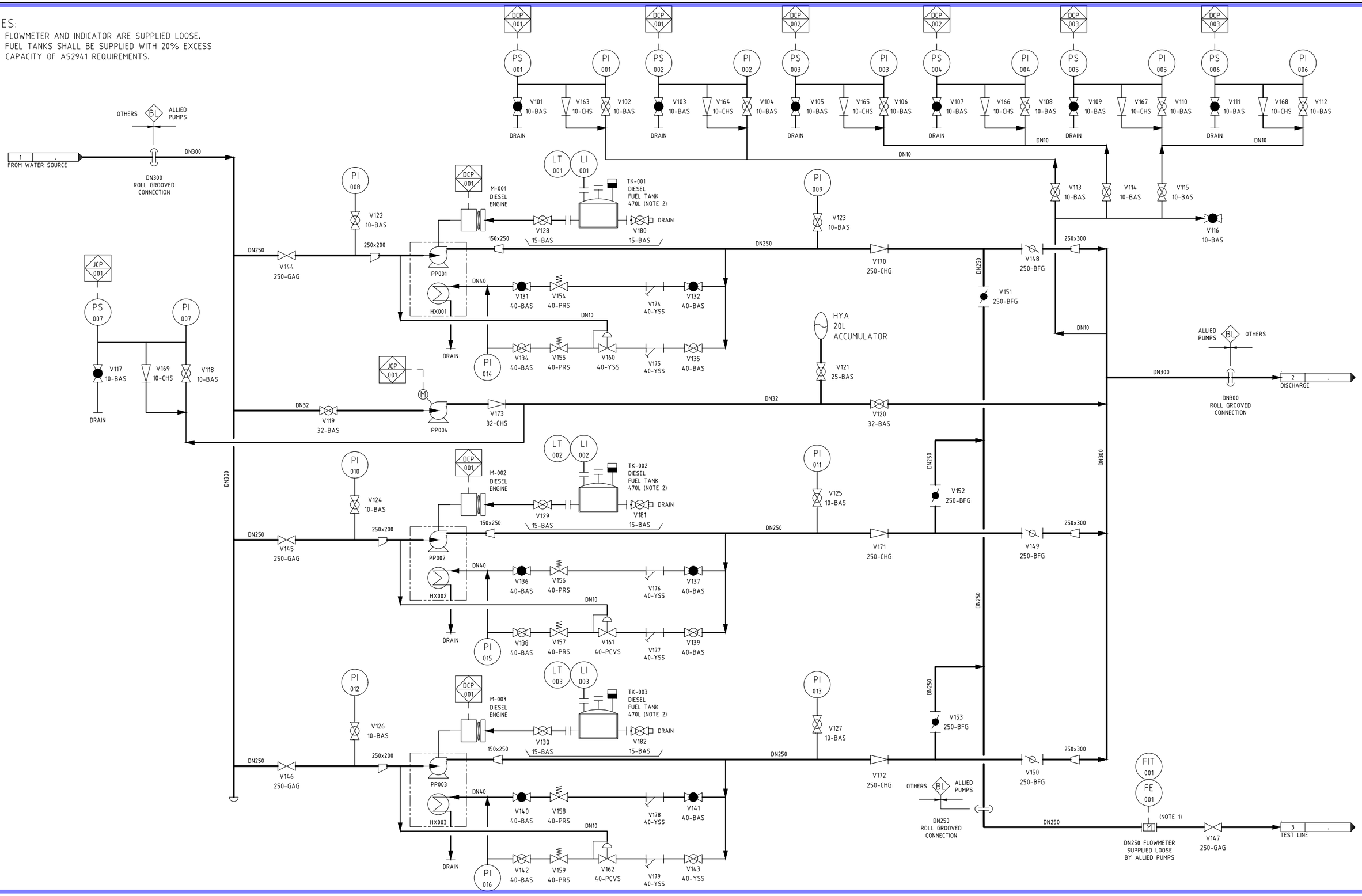

REV	DESCRIPTION	BY	DATE	CHK	DATE	APP	DATE	REFERENCE
1	ISSUED FOR APPROVAL	MBC	13.12.22	ACS	13.12.22	ACS	13.12.22	.

Allied Pumps
Specialists in Package Pumping Solutions
2 Modal Crescent (Cnr Baile Rd)
Canning Vale, WA 6155
+61 (08) 9350 1000
www.alliedpumps.com.au

COPYRIGHT. THIS DRAWING AND DESIGN MUST NOT BE COPIED IN WHOLE OR IN PART WITHOUT THE WRITTEN CONSENT OF ALLIED PUMPS AND AS REPRODUCED MUST CARRY ALLIED PUMPS DESIGNATION.

CLIENT. McCONNELL DOWEL CONSTRUCTORS PTY TLD

PROJECT. PORT KEMBLA GAS TERMINAL FIRE WATER PUMPS

TITLE. TRIPLE DIESEL FIRE PROTECTION PUMPSET
HYDRANT ONLY SYSTEM/INTEGRATED HOSE REEL
PIPING & INSTRUMENTATION DIAGRAM

SHEET SIZE. A1 | SCALE. 1:NTS | INTERNAL DOC CONTROL | PROJECT DRG. No. 99093-3-P-01 | REVISION. A

C:\USERS\BRYANCA\DOCUMENTS\99093-3\PID DWG\99093-3-P-01_A.DWG

LINE NUMBERING

SAMPLE PIPE NUMBERING PW-1234-100-B

- DENOTES FLUID INDENTIFICATION
- LINE NUMBER
- NOMINAL PIPELINE SIZE (DN)
- PIPE SPECIFICATION

REFER STANDARD SPECIFICATION SS-M120 FOR COMPLETE DETAILS

LINE CONTENTS

SERVICE	CODE
MAINS WATER	MW
PROCESS WATER	PW
FIRE WATER	FW
RAW WATER	RW
POTABLE WATER	POT
COMPRESSED AIR	PA
INSTRUMENT AIR	IA
FUEL OIL	FO
LUBRICATION OIL	LO
HYDRAULIC OIL	HO
WASTE WATER	WW
SLURRY	SL
AMMONIUM NITRATE EMULSION	AN

REFER STANDARD SPECIFICATION SS-M120 FOR COMPLETE DETAILS

VALVE IDENTIFICATION & VALVE SYMBOLS

- BALL VALVE
- CHECK (NON RETURN) VALVE
- BUTTERFLY VALVE
- DIAPHRAGM VALVE
- DUMP VALVE
- DART VALVE
- SLUICE VALVE
- GATE VALVE
- FLOAT VALVE (BUTTERFLY)
- FLOAT VALVE (GATE OR GENERAL)
- FLOAT VALVE (GLOBE)
- KNIFEGATE VALVE
- PRESSURE CONTROL VALVE - INTERNAL TAP
- PRESSURE CONTROL VALVE - EXTERNAL TAP
- PRESSURE SUSTAINING VALVE - INTERNAL & EXTERNAL TAP
- AIR RELEASE VACUUM BREAKER
- 3 WAY VALVE
- AUTOMATIC DRAIN VALVE
- IN LINE RELIEF VALVE
- ANGLE RELIEF VALVE
- PLUG VALVE
- NEEDLE VALVE
- GLOBE VALVE
- PINCH VALVE

PIPING SYMBOLS

LINE NUMBER · TO DRAWING NUMBER · SPEC BREAK · XXXXXX · VALVE NUMBER · LINE NUMBER · FROM DRAWING NUMBER

- FLEXIBLE HOSE WITH QUICK CONNECT COUPLINGS
- FLEXIBLE HOSE (WITH HOSETAIL CONNECTION)
- FLEXIBLE HOSE WITH HOSE COUPLING
- FLEXIBLE HOSE WITH FLANGED ENDS/ADAPTORS
- BRANCH AND CROSS
- LINE CROSSING
- HOSE CONNECTION
- ORIFICE PLATE
- BURSTING DISC OR DIAPHRAGM
- FLANGE CONNECTION
- CAPPED END
- BLANKED END
- PRESSURE VACUUM VENT
- REDUCER
- Y STRAINER
- DIPLOMAT COUPLING
- MOISTURE TRAP
- BATTERY LIMIT OR TERMINATION POINT
- FLEXIBLE COUPLING
- INLINE SIGHT GLASS
- SPECIAL ITEM
- FIRE HYDRANT
- FIRE HOSE REEL
- HOSE REEL
- HOSE REEL NOZZLE
- GATE
- WEIR
- BREATHER
- FILTER
- WATER CANNON
- VICTAULIC COUPLING
- WATER SPRAYS
- AIR LUBRICATOR
- AIR FILTER
- AIR REGULATOR
- EDUCTOR
- SPECTACLE BLIND (OPEN POSITION)
- TECH TAYLOR VALVE

GENERAL NOTES

1. '*' DENOTES MECHANICAL SUPPLY.
2. BY VENDOR

"BY VENDOR" DENOTES ALL ITEMS WITHIN BLOCK SUPPLIED WITH MAIN EQUIPMENT

INSTRUMENT SYMBOLS

- GEAR BOX/HYDRAULIC
- SIREN
- VARIABLE AREA FLOWMETER (ROTAMETER)
- TURBINE FLOW METER (FLANGED)
- PITOT TUBE (FLANGED)
- MAGNETIC FLOW ELEMENT (FLANGED)
- NUCLEAR DEVICE
- INDICATOR LAMP
- DUMP INDICATOR
- DIAPHRAGM SEAL SCREWED
- DIAPHRAGM SEAL FLANGED
- WEIGHTOMETER
- VARIABLE SPEED
- FLOW TRANSMITTER
- MOTOR
- SOLENOID
- PD FLOW METER WITH AIR ELIMINATOR & CHECK VALVE

LOGIC IDENTIFIERS

- INTERLOCK (HARD WIRED)
- INTERLOCK (CONTROL SYSTEM)
- LOW SIGNAL SELECTION
- HIGH SIGNAL SELECTION
- MULTIPLICATION
- SUMMATION OF SIGNALS
- SUBTRACTION P1-P2
- MISCELLANEOUS FUNCTION

EQUIPMENT IDENTIFIERS

- FIXED DISPLACEMENT PUMP
- CENTRIFUGAL PUMP
- DIESEL ENGINE
- HEAT EXCHANGE
- HYDRAULIC ACCUMULATOR
- STORAGE TANK

INSTRUMENT/FIELD DEVICES

DU/ST	DUTY/STANDBY
ACK	ACKNOWLEDGE
A/M	AUTO/MANUAL
BP/VS	BYPASS/VARIABLE SPEED
EN/DIS	ENABLE/DISABLE
F/O/S	FAST/OFF/SLOW
F/R	FORWARD/REVERSE
F/R/S	FORWARD/REVERSE/STOP
FWR	FIRE HOSE REEL
H/O/A	HAND/OFF/AUTO
H/O/R	HAND/OFF/REMOTE
H/LO	HIGH/LOW
I/D	INCREASE/DECREASE
L/R	LOCAL/REMOTE
L/O/R	LOCAL/OFF/REMOTE
SEL	FUNCTION SELECT
O/C/R	OPEN/CLOSE/REMOTE
OP/CL	OPEN/CLOSE
U/D	UP/DOWN (INCLUDE RAISE/LOWER)
STT/STP	START/STOP
I/P	CURRENT IN/PNEUMATIC OUT
I/F	CURRENT IN/FREQUENCY OUT
E/P	VOLTAGE IN/PNEUMATIC OUT
E/I	VOLTAGE IN/CURRENT OUT
NO	NORMALLY OPEN
NC	NORMALLY CLOSED
FO	FAIL OPEN
FC	FAIL CLOSED
FL	FAIL IN LAST POSITION
FI	FAIL INDETERMINATE
SP	STOP
ST	START
CL	CLOSE
OP	OPEN
HTR	HEATER
RSP	REMOTE SET POINT
LO	LOCKED OPEN
LC	LOCKED CLOSED
LCP	LOCAL CONTROL PANEL
LCS	LOCAL CONTROL STATION
WD	WASHDOWN
FDM	FLAG DROP MARKER
CD	CLIP DETECTOR
√	SQUARE ROOT EXTRACTOR
> F	MULTI-PORT VALVE FAIL IN DIRECTION OF ARROW
ES	ELECTRICAL SUPPLY
E	EQUIPMENT PROVIDED WITH EMERGENCY POWER
BCS	BLOCKED CHUTE SWITCH
BDS	BELT DRIFT SWITCH
EN	ENCODER
FBP	FLOATING RETURN BELT PLOUGH
PHS	HEAD PULLY SCRAPER (PRIMARY)
PS	PRESSURE/PROXIMITY SWITCH
PWS	PULL WIRE SWITCH
RDP	RIP DETECTOR (PAN)
RDS	RIP DETECTOR STRING
RTD	RESISTIVE TEMPERATURE DEVICE
SHS	HEAD PULLY SCRAPER (SECONDARY
SSS	SECONDARY SCRAPER SPRAY
USS	UNDER SPEED SWITCH
HWS	HOT WATER SYSTEM
WC	TOILET

TABLE 1: INSTRUMENT IDENTIFICATION AND SYMBOLS

1st LETTER CATEGORY	DESCRIPTION	2nd LETTER CATEGORY	DESCRIPTION	3rd LETTER CATEGORY	DESCRIPTION/MODIFIER
A	ANALYSIS	A	ALARM		
B	BURNER FLAME				
C	CONDUCTIVITY (ELECTRICAL)	C	CONTROL/CAMERA	C	CONTROLLER/ CLOSE/CLOSED
D	DENSITY	D	DIFFERENTIAL		
E	VOLTAGE	E	ELEMENT	E	ELEMENT
F	FLOW RATE	F	RATIO		
G	GAUGING (DIMENSIONAL)	G	GLASS/GAUGE		
H	HAND (MANUAL)			H	HIGH
I	CURRENT (ELECTRICAL)	I	INDICATOR	I	INDICATOR
J	POWER				
K	TIME				
L	LEVEL			L	LOW
M	MECHANICAL EQUIPMENT TAG	M	MASS	M	MEDIUM
N	TORQUE	N	CALCULATION		
O	ORIFICE/ RESTRICTION	O	ORIFICE/ RESTRICTION	O	OPEN/OPENED
P	PRESSURE OR VACCUUM	P	POINT		
Q	QUANTITY	Q	TOTALISER	Q	TOTALISER
R	RADIATION	R	RECORDER RELIEF	R	RECORDER
S	SOLENOID, SPEED OR FREQUENCY	S	SWITCH	S	SAFETY
T	TEMPERATURE	T	TRANSMITTER	T	TRANSMITTER
U	MULTIVARIABLE				
V	VIBRATION	V	VALVE/ DAMPER WELL	V	VALVE
W	WEIGHT OR FORCE	W	WEIGHT OR FORCE		
X	MISCELLANEOUS	X	TRANSMISSION SOURCE		
Y	EVENT, STATE ACTUATED	Y	AUXILLARY DEVICES		
Z	POSITION	Z	ACTUATOR FINAL CONTROL ELEMENT		

INSTRUMENT TAG NUMBERING SYSTEM

EACH INSTRUMENT IS IDENTIFIED FROM THE TABLE ABOVE BY A COMBINATION OF LETTERS AND NUMBERS. A LETTER SUFFIX IS ADDED TO DIFFERENTIATE BETWEEN INSTRUMENTS BEARING THE SAME LETTER PREFIX WITHIN ANY GIVEN LOOP.

F	IC	123	A
FIRST LETTER	SUCCEEDING LETTERS	NUMBER	SUFFIX IF REQ'D.
FUNCTIONAL IDENTIFICATION		LOOP NUMBER	
INSTRUMENT TAG NUMBER			

SUPPLY SYMBOLS

- CONNECTIONS TO PROCESS OR MECHANICAL LINK
- PNEUMATIC SIGNAL AIR SUPPLY
- ELECTRICAL SIGNAL
- SYSTEM/SOFTWARE SIGNAL
- CAPILLARY TUBING (FILLED SYSTEM)
- HYDRAULIC SIGNAL OR HYDRAULIC SUPPLY
- RADIO/ELECTROMAGNETIC OR SONIC SIGNAL
- EQUIPMENT BOUNDARY

TAG IDENTIFIERS

- TAG DESCRIPTOR
- FIELD MOUNTED DEVICE (OPERATOR ACCESSIBLE)
- LOOP NUMBER
- PANEL MOUNTED DEVICE (OPERATOR ACCESSIBLE)
- PANEL MOUNTED DEVICE (OPERATOR INACCESSIBLE)
- CONTROL SYSTEM LOGIC CENTRAL CONTROL ROOM (OPERATOR INACCESSIBLE)
- CONTROL SYSTEM LOGIC/DISPLAY (OPERATOR ACCESSIBLE)
- PROGRAMMABLE LOGIC CONTROL (OPERATOR ACCESSIBLE)

SCADA ANALOG ALARMS

LIT 11055 · LI 11055 · H · L · LALL 11055 · LAHH 11055

ALARM SETPOINTS PROGRAMMED IN SCADA ANALOG BLOCK

INTERLOCK ALARM SETPOINTS PROGRAMMED IN PLC & DISPLAYED ON SCADA SYSTEM

EQUIPMENT ABBREVIATIONS

AB	AIR BREATHER	LU	LUBRICATION UNIT
ACM	ACCUMULATOR	LY	MICROWAVE SENDER
ACT	ACTUATOR	MA	MOISTURE ANALYSER
AF	APRON FEEDER	MB	MARSHALLING BOX
AG	AGITATOR	MCC	MOTOR CONTROL CENTRE
AR	AIR RECEIVER	MD	METAL DETECTOR
AS	AIR/OIL SEPARATOR	MI	MIXER
AT	AIR BLASTER	ML	MILL
BA	BATTERY	MR	MONORAIL
BB	BELT BRUSH	MT	MOTOR
BBR	BAG BREAKER	MX	MULTIPLEXER
BC	BATTERY CHARGER	OA	ONSTREAM ANALYSER
BCA	BELT CARCASS SCANNER	OIS	OPERATOR INTERFACE STATION
BE	BUCKET ELEVATOR	OS	OIL SEPERATOR
BF	BELT FEEDER	OV	OVEN
BG	BOOM GATE	PDS	PRESSURE DIFFERENTIAL SWITCH
BM	BELT PROFILE MONITOR	PDT	PRESSURE DIFFERENTIAL TRANSMITTER
BO	BORE	PH	PRESS HYDRAULIC
BP	BORE PUMP	PL	PLATEWORK (MISCELLANEOUS)
BR	BRAKE	PLC	PROGRAMMABLE LOGIC CONTROLLER
BRE	BRAKING RESISTOR	PN	PANEL, CONTROL
BRL	BELT REELER	PP	PUMP
BWR	BLOWER	PS	PRESSURE SWITCH
BWS	BELT WASH STATION	PI	PRESSURE INDICATOR
BX	DISTRIBUTION BOX (SLURRY)	PIT	PRESSURE INDICATOR TRANSMITTER
CA	CAMERA	PT	PRESSURE TRANSMITTER
CH	CHUTE	PU	PULLEY
CHL	CHILLER UNIT	RA	REMOTE ACCELEROMETER
CLA	CLASSIFIER/CLARIFIER	RB	ROCK BREAKER
CLR	HEAT EXCHANGER/COOLER	RC	RECLAIMER
CN	CRANE	RCD	RESIDUAL CURRENT DETECTOR
CP	COMPRESSOR	RE	ROTOR CUBICLE
CS	CRUSHER	RH	ROCK HOOK
CU	SAMPLE CUTTER	RSC	ROTARY SAMPLE COLLECTOR
CV	CONVEYOR	RV	ROTARY VALVE
CY	CYCLONE	RX	RECEIVER
DA	DRIVE	SA	SAMPLE STATION
DB	DISTRIBUTION BOARD	SCB	SCRUBBER
DJB	DYNAMIC JUNCTION BOX	SD	SURGE DIVERTER
DT	DUCT	SH	SHUTTLE
DTV	DART VALVE	SHV	SHEAVE
DU	DUST COLLECTOR	SHW	SAFETY SHOWER
DY	AIR DRYER	SI	SILENCER
EC	EVAPORATIVE COOLER	SJB	STATIC JUNCTION BOX
ESS	EMERGENCY STOP	SK	STACKER
EW	EYE WASH	SKT	CONVEYOR SKIRT
FC	FLUID COUPLING	SLD	SHIPLOADER
FD	FIRE DETECTOR	SM	STATIC MIXER
FDM	FLAG DROP MARKER	SP	SURGE PLOW
FIP	FIRE INDICATOR PANEL	SPL	SPLITTER
FL	FILTER	SS	SIZER
FLC	FLOCCULANT ADDITION	SST	SOFT STARTER
FN	FAN	SU	SUMP
FQ	FLOW TOTALISER	SV	SOLENOID VALVE
FT	FLOW TRANSMITTER	SW	SWITCH
FUR	FURNACE	TBX	TERMINAL BOX
GB	GEAR BOX	TCH	TACHOMETER
GF	GRIZZLY FEEDER	TH	THICKENER
GN	GENERATOR	THR	THERMISTOR
GR	GRIZZLY (STATIC)	TL	TRAIN LOADOUT
GT	GAS GENERATOR	TM	TRAMP MAGNET
H	STARTUP WARNING SIREN	TP	TRIPPER
HB	HUNGRY BOARD	TR	TROMMEL
HD	HOOD	TRF	TRANSFORMER
HO	HOIST	TRO	TROLLEY
HOP	HOPPER	TS	TEMPERATURE SWITCH
HP	HYDRAULIC POWER PACK	TT	TEMPERATURE TRANSMITTER
HTR	HEATER	TU	TAKE UP
HX	HEAT EXCHANGER	TUW	TAKE UP WEIGHT
IB	IMPACT BED	TX	TRANSMITTER
IDL	IDLER	UPS	UNINTERRUPTABLE POWER SUPPLY
IP	INSTRUMENT PANEL	VB	VIBRATOR
JB	JUNCTION BOX	VC	VACUUM CONTACTOR
LA	LAUNDER	VF	VIBRATING FEEDER
LC	LOAD CELL	VM	VIBRATION MONITORING SYSTEM
LCS	LOCAL CONTROL STATION	VS	VVVF DRIVE
LE	LEVEL ELEMENT	VT	VOLTAGE TRANSFORMER
LG	LEVEL GAUGE	WC	WATER CANNON
LGT	LIGHT	WL	WARNING LIGHT
LN	LIGHTNING PROTECTION	WN	WINCH
LOS	LOCK OFF STOP	WO	WELDING OUTLET
LP	LIGHT POLE	WS	WATER TREATMENT PLANT
LS	LEVEL SWITCH	WT	WEIGHTOMETER
LT	LEVEL TRANSMITTER	XR	XRAY SPECTOMETER

REV	DESCRIPTION	BY	DATE	CHK	DATE	APP	DATE	REFERENCE
1	ISSUED FOR APPROVAL	MBC	24.11.22	ACS	24.11.22	ACS	24.11.22	.

Allied Pumps

Specialists in Package Pumping Solutions

2 Modal Crescent (Cnr Baile Rd)
Canning Vale, WA 6155
+61 (08) 9350 1000
www.alliedpumps.com.au

COPYRIGHT. THIS DRAWING AND DESIGN MUST NOT BE COPIED IN WHOLE OR IN PART WITHOUT THE WRITTEN CONSENT OF ALLIED PUMPS AND AS REPRODUCED MUST CARRY ALLIED PUMPS DESIGNATION.

CLIENT. McCONNELL DOWEL CONSTRUCTORS PTY TLD

PROJECT. PORT KEMBLA GAS TERMINAL FIRE WATER PUMPS

TITLE. TRIPLE DIESEL FIRE PROTECTION PUMPSET HYDRANT ONLY SYSTEM/INTEGRATED HOSE REEL PIPING & INSTRUMENTATION DIAGRAM

SHEET SIZE. A1 · SCALE. 1:NTS · INTERNAL DOC CONTROL · PROJECT DRG. No. 99093-3-P-02 · REVISION. A

C:\USERS\BRYANCA\DOCUMENTS\99093-3\PID DWG\99093-3-P-01_A.DWG

X-101
INSTRUMENT AIR PACKAGE
DESIGN PRESSURE: 1.2 MPag
DESIGN TEMPERATURE: -10°/65°C
(HOLD 1)

Refer to P&ID E12201-PID-001 Sheet 1

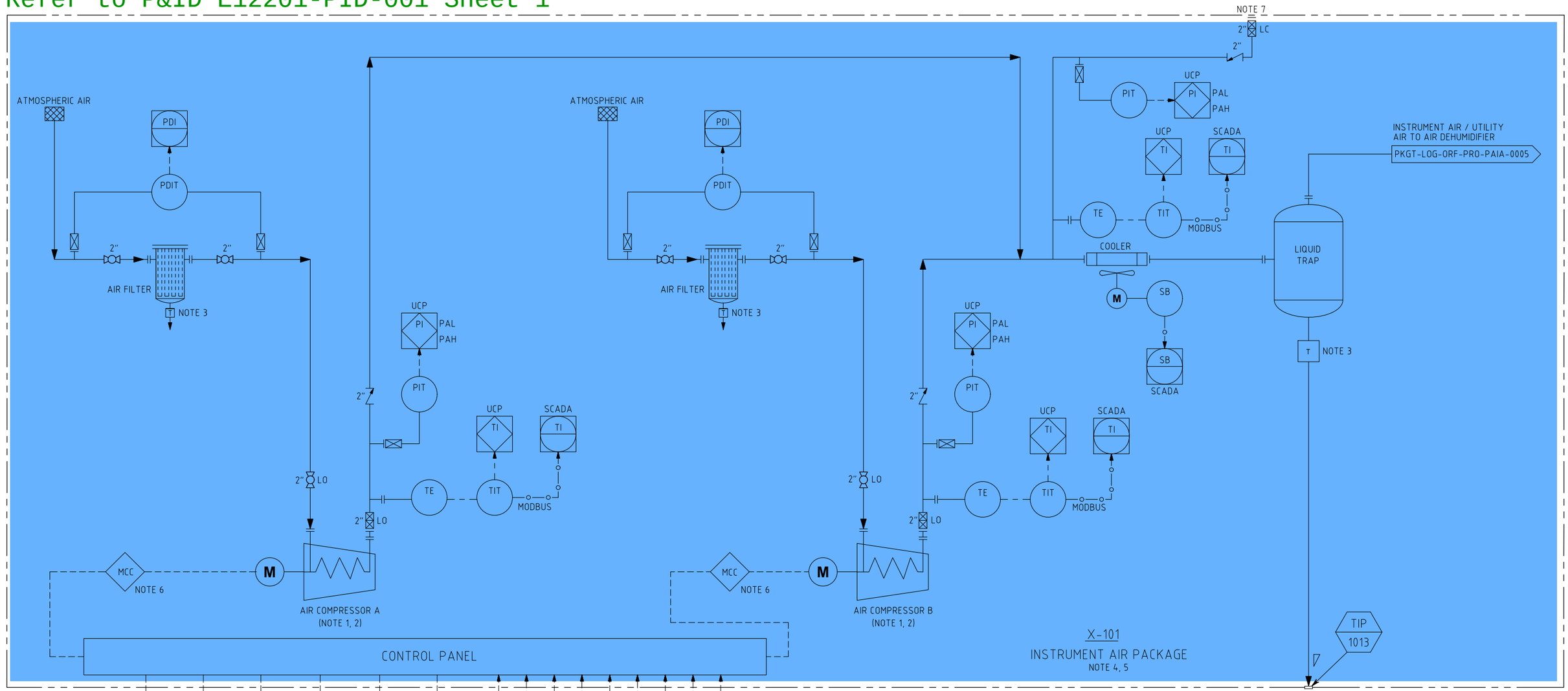

XA 054009A	XA 054009B	IB 054010A	IB 054010B	XI 054011A	XI 054011B	HS 054012A	HS 054013A	HS 054014A	HS 054015A	
COMP. A COMMON ALARM	COMP. B COMMON ALARM	COMP. A RUN STATUS	COMP. B RUN STATUS	COMP. A TRIP INDICATION	COMP. B TRIP INDICATION	COMP. A PCS START	COMP. A PCS STOP	COMP. B PCS START	COMP. B PCS STOP	
						HS 054012B	HS 054013B	HS 054014B	HS 054015B	
						COMP. A PCS START	COMP. A PCS STOP	COMP. B PCS START	COMP. B PCS STOP	

Node 8

FROM PI-054002
PKGT-LOG-ORF-PRO-PAIA-0006

HOLD:

1. PACKAGE DETAILS TO BE CONFIRMED WITH VENDOR.

NOTES:

1. CAPACITY CONTROL OF AIR COMPRESSORS TO BE "LOADING-UNLOADING-STOP" CYCLING CONTROL.
2. AIR COMPRESSORS IN 2x100% CONFIGURATION.
3. LIQUID TRAP AUTOMATIC DRAIN.
4. THE INSTRUMENT AIR PACKAGE IS A VENDOR PACKAGE.
5. PKGT-LOG-ORF-PRO-PAIA-0004 AND PKGT-LOG-ORF-PRO-PAIA-0005 COMPRISE OF ONE PACKAGE.
6. MOTOR CONTROL CENTER
7. PROVISION FOR A SKID MOUNTED/PORTABLE AIR COMPRESSOR. AIR FILTER IS INCLUDED IN THE PORTABLE AIR COMPRESSOR SKID (TBC).

DOC No.	DESCRIPTION	REV No	DATE	DESCRIPTION	DRN	CHK'D	DSG'D	DSGCHK	PM APP
REFERENCE DOCUMENTS		REVISIONS							
		0	09/09/22	ISSUED FOR USE	ISS	LIM	NGL	LAA	CJS

CLIENT: AIE

LOGICAMMS a verbrec company

© THIS DRAWING AND DESIGN CONTAINS PROPRIETARY INFORMATION. IT SHALL NOT BE USED OR REPRODUCED OR ANY OF ITS CONTENTS DISCLOSED IN WHOLE OR PART WITHOUT PRIOR WRITTEN CONSENT OF LOGICAMMS LTD.

DRG No.

CLIENT

SCALE:	AS SHOWN	
DRAWN	ISS	09/09/22
CHECKED	LIM	09/09/22
DESIGNED	NGL	09/09/22
DES. CHECK	LAA	09/09/22
PROJ. MGR	CJS	09/09/22

PORT KEMBLA GAS TERMINAL DETAILED DESIGN
WHARF TOPSIDE
INSTRUMENT AND UTILITY AIR PACKAGE 1/2
PIPING AND INSTRUMENTATION DIAGRAM

A1 DRG. No. PKGT-LOG-ORF-PRO-PAIA-0004 Rev 0

V-101

INSTRUMENT AIR RECEIVER

DIMENSIONS:
HEIGHT= 2.4 m T/T
ID= 1.1 m
DESIGN PRES: 1.2 MPag
DESIGN TEMP: -10°/65°C

Refer to P&ID E12201-PID-001 Sheet 1

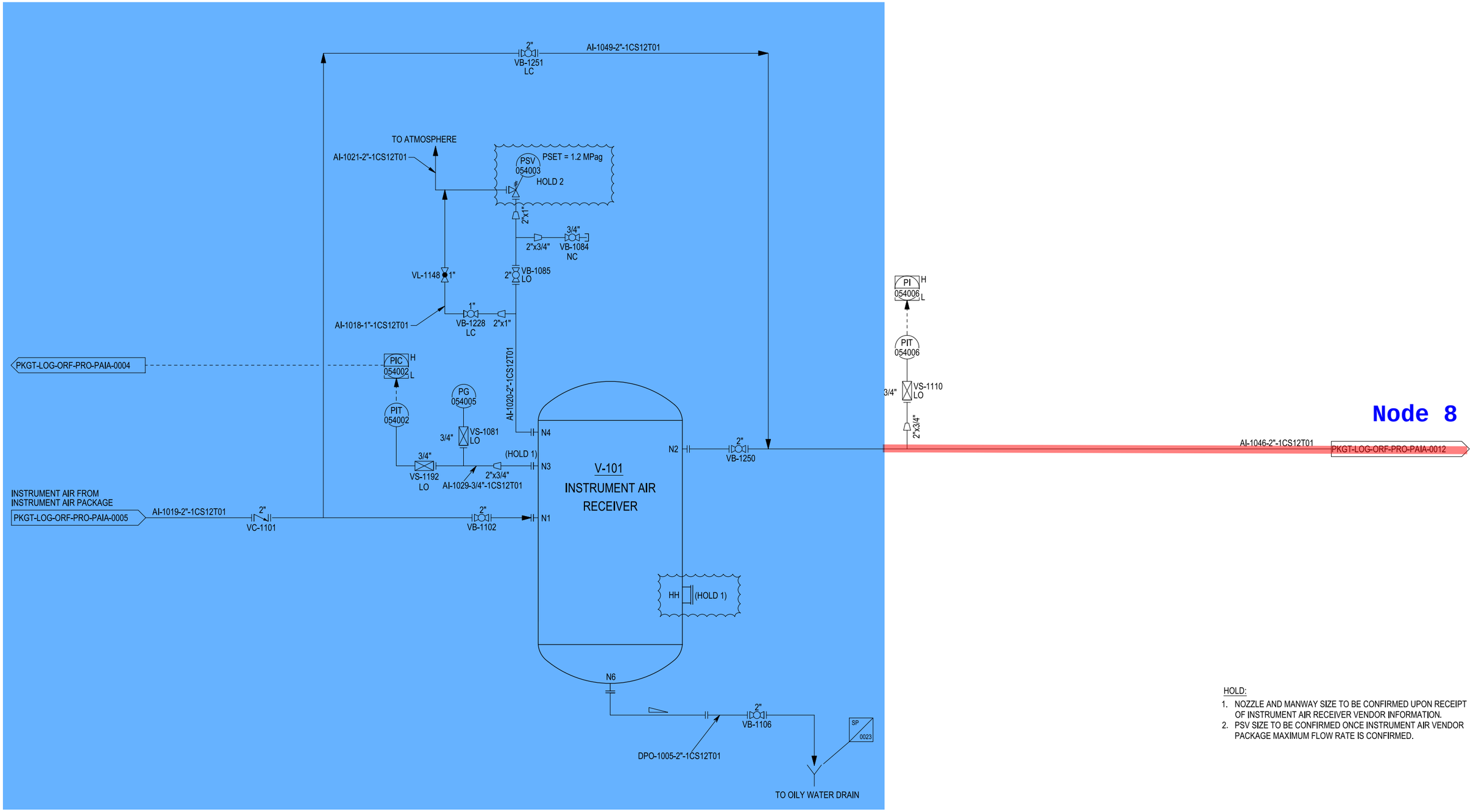

HOLD:

1. NOZZLE AND MANWAY SIZE TO BE CONFIRMED UPON RECEIPT OF INSTRUMENT AIR RECEIVER VENDOR INFORMATION.
2. PSV SIZE TO BE CONFIRMED ONCE INSTRUMENT AIR VENDOR PACKAGE MAXIMUM FLOW RATE IS CONFIRMED.

DOC No.	DESCRIPTION	REV No	DATE	DESCRIPTION	DRN	CHK'D	DSG'D	DSGCHK	PM APP
		0	09/08/22	ISSUED FOR USE	ISS	BAC	NGL	LAA	CJS

REFERENCE DOCUMENTS — REVISIONS

CLIENT: AIE

LOGICAMMS a verbrec company

© THIS DRAWING AND DESIGN CONTAINS PROPRIETARY INFORMATION. IT SHALL NOT BE USED OR REPRODUCED OR ANY OF ITS CONTENTS DISCLOSED IN WHOLE OR PART WITHOUT PRIOR WRITTEN CONSENT OF LOGICAMMS LTD.

DRG No.

CLIENT

SCALE:	NTS	
DRAWN	ISS	09/08/22
CHECKED	BAC	09/08/22
DESIGNED	NL	09/08/22
DES. CHECK	LAA	09/08/22
PROJ. MGR	CJS	09/08/22

PORT KEMBLA GAS TERMINAL DETAILED DESIGN
WHARF TOPSIDE
UTILITY AIR HEADER AND INSTRUMENT RECEIVER
PIPING AND INSTRUMENTATION DIAGRAM

A1 DRG. No. PKGT-LOG-ORF-PRO-PAIA-0006 Rev 0

DO NOT SCALE - IF IN DOUBT, ASK

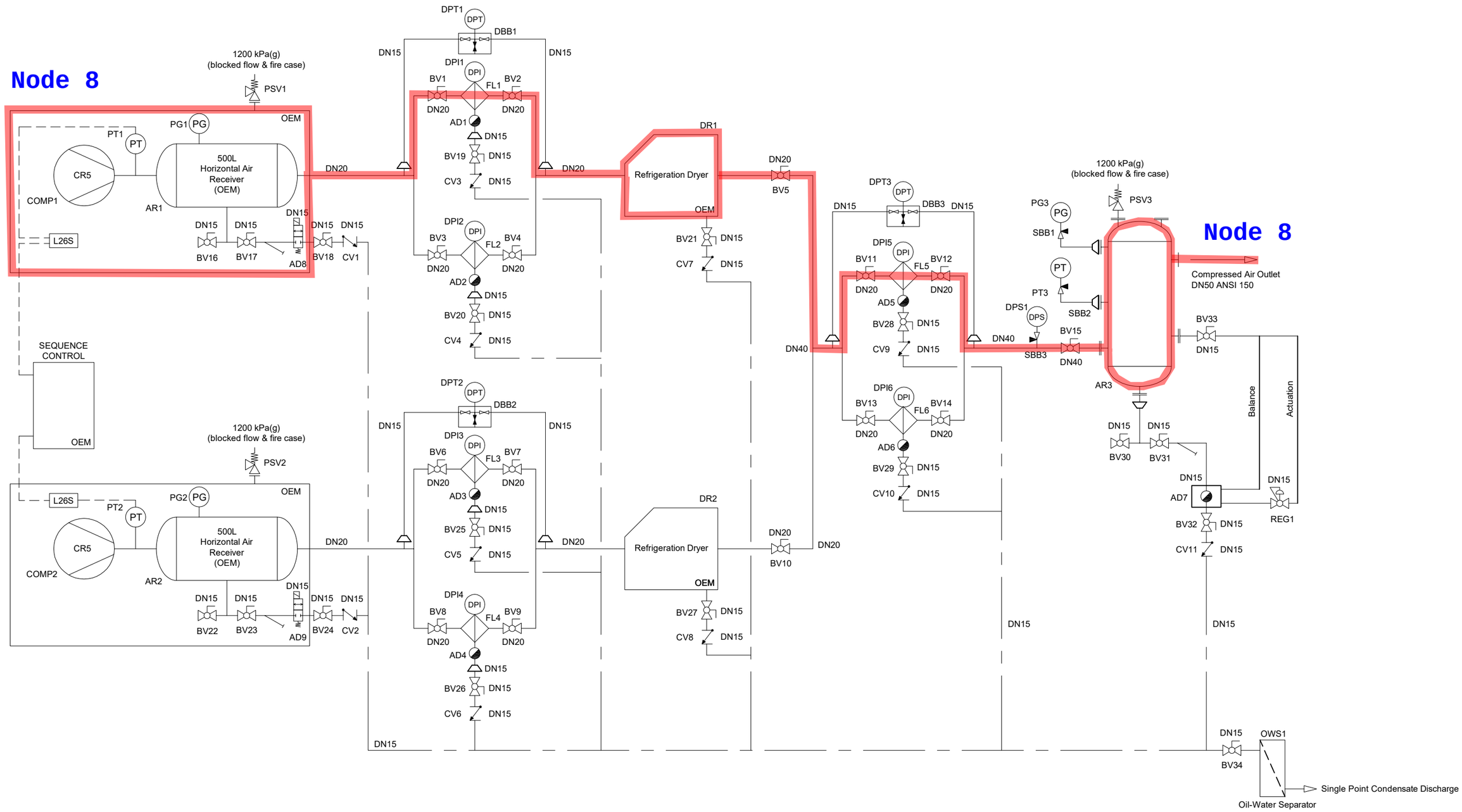

REV.	DATE	DESCRIPTION	DRAWN	CHK'D	APP'D
A	04.11.22	PRELIMINARY ISSUE FOR HAZOP REVIEW	TPI	AF	AF

This Drawing is Copyright and shall remain the property of CAPS Australia Pty Ltd and shall not be used for any purpose, unless authorised in writing.

APPROVED ..... DATE .....

CAD DRAWING
DO NOT MANUALLY CHANGE
ORIGINAL SHEET SIZE
A3

DESIGNED BY: CAPS
DRAWN BY: TPI
CHECKED BY: KA
SCALE: NTS
ALL DIMENSIONS IN mm U.O.N.

CAPS
Complete Air & Power Solutions
Australia wide Sales . Hire . Service www.capsaustralia.com.au

CUSTOMER: McConnel Dowell
PROJECT: Port Kembla Gas Terminal
TITLE: P&ID - Compressed Air Package
DRAWING NO.: E12201-PID-001 Sheet 1
REV: A

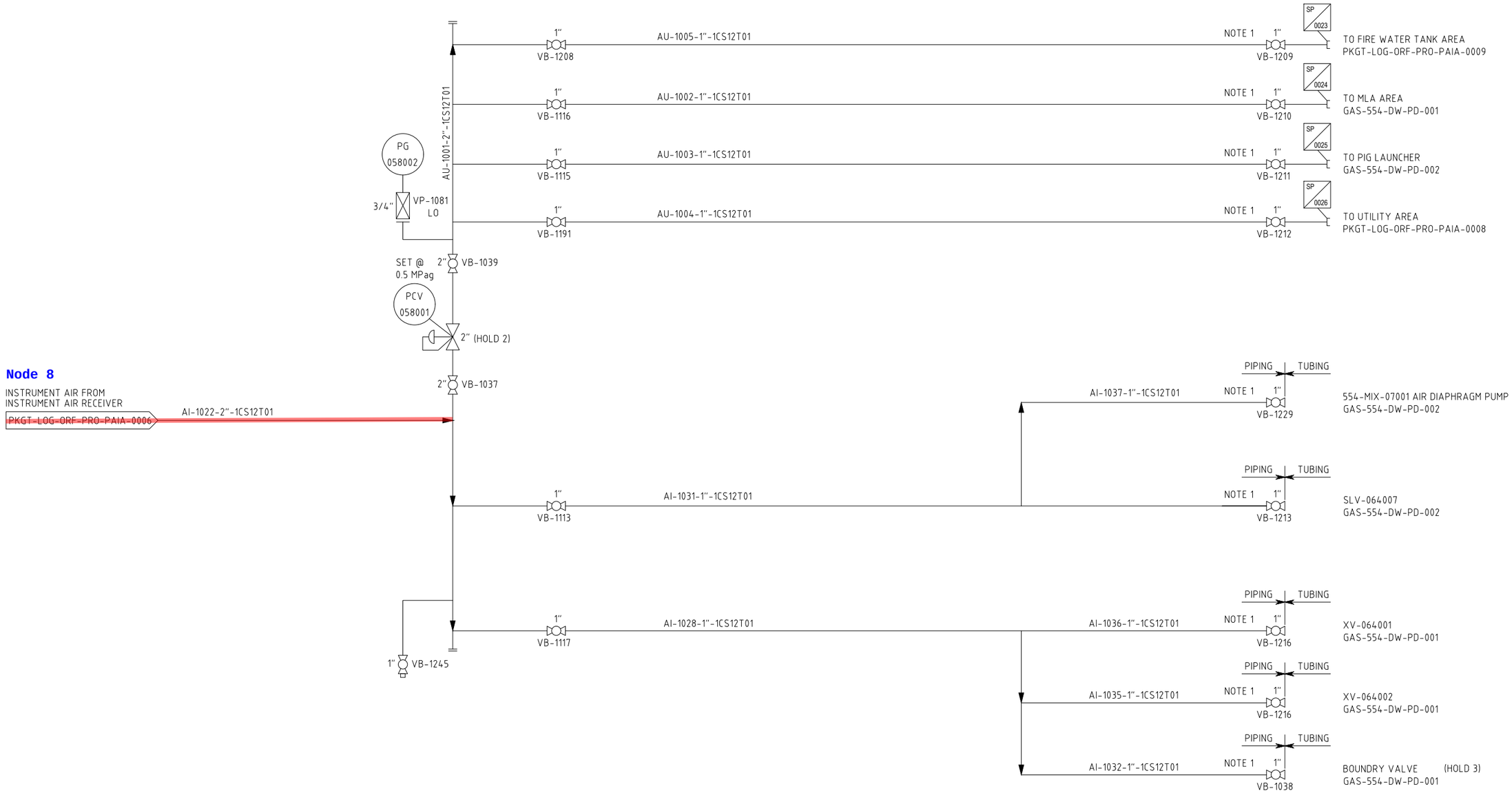

HOLD:

1. NUMBER OF INDIVIDUAL UTILITY AIR CONNECTIONS TO BE CONFIRMED BASED ON 3D MODEL REVIEW.
2. SET PRESSURE TO BE CONFIRMED.
3. VALVE TAG NUMBER AND IA USAGE TO BE CONFIRMED.

NOTES:

1. LENGTH OF 1" LINE TO BE MINIMISED.

ISSUED FOR HAZOP

DOC No.	DESCRIPTION	REV No	DATE	DESCRIPTION	DRN	CHK'D	DSG'D	DSGCHK	PM APP
		B	18/01/22	ISSUED FOR HAZOP	ISS	BAC	AM	LAA	CJS
		A	03/12/21	ISSUED FOR REVIEW	AG	BC	LP	LA	CJS

REFERENCE DOCUMENTS — REVISIONS

CLIENT: AIE

LOGICAMMS a verbrec company

© THIS DRAWING AND DESIGN CONTAINS PROPRIETARY INFORMATION. IT SHALL NOT BE USED OR REPRODUCED OR ANY OF ITS CONTENTS DISCLOSED IN WHOLE OR PART WITHOUT PRIOR WRITTEN CONSENT OF LOGICAMMS LTD.

DRG No.

SCALE:	AS SHOWN
DRAWN	LCN
CHECKED	
DESIGNED	
DES. CHECK	
PROJ. MGR	
CLIENT	

PORT KEMBLA GAS TERMINAL DETAILED DESIGN
WHARF TOPSIDE
UTILITY AND INSTRUMENT AIR DISTRIBUTION
PIPING AND INSTRUMENTATION DIAGRAM

A1 — DRG. No. PKGT-LOG-ORF-PRO-PAIA-0012 — Rev B

Node 13

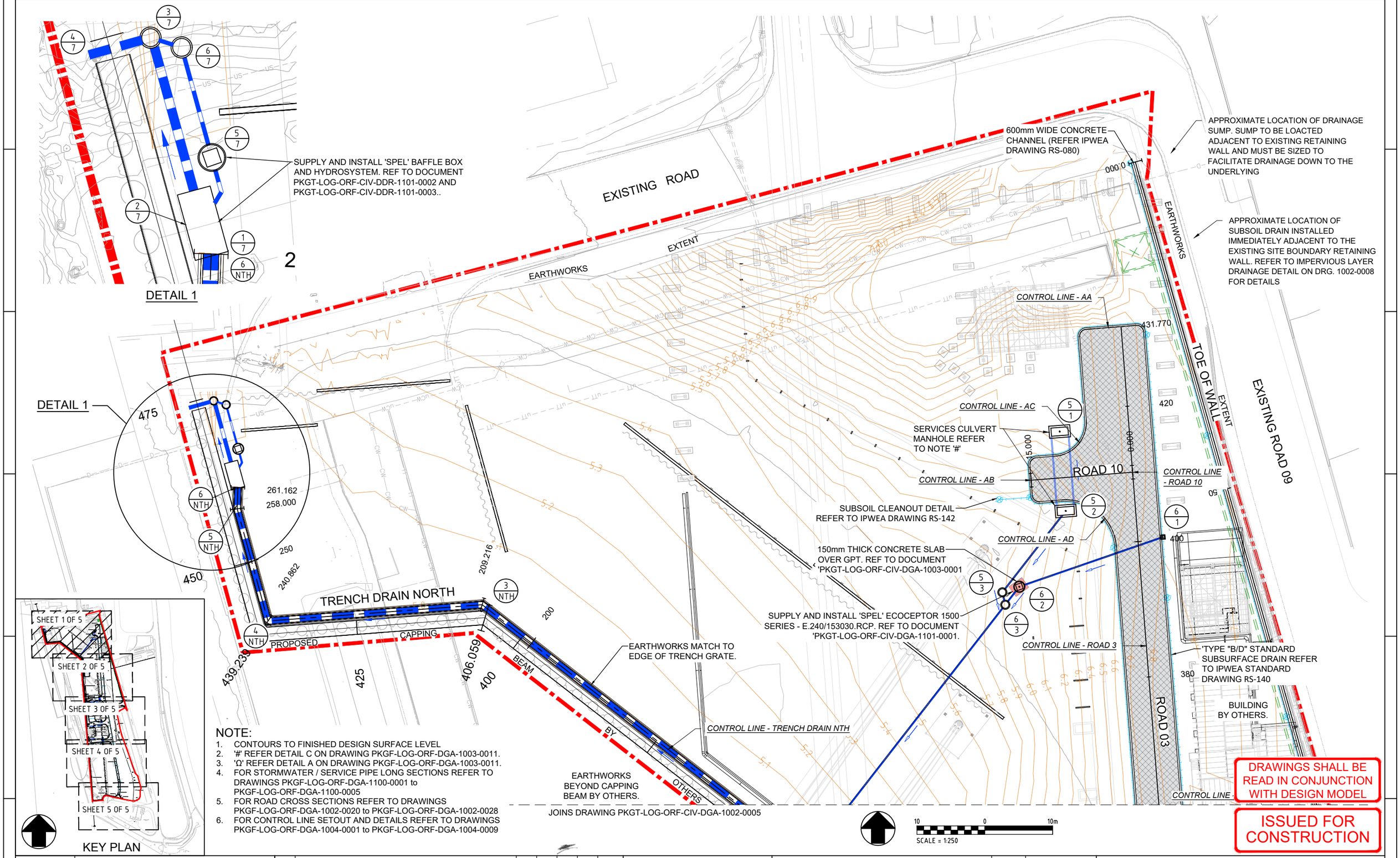

NOTE:

1. CONTOURS TO FINISHED DESIGN SURFACE LEVEL
2. '#' REFER DETAIL C ON DRAWING PKGF-LOG-ORF-DGA-1003-0011.
3. 'Ω' REFER DETAIL A ON DRAWING PKGF-LOG-ORF-DGA-1003-0011.
4. FOR STORMWATER / SERVICE PIPE LONG SECTIONS REFER TO DRAWINGS PKGF-LOG-ORF-DGA-1100-0001 to PKGF-LOG-ORF-DGA-1100-0005
5. FOR ROAD CROSS SECTIONS REFER TO DRAWINGS PKGF-LOG-ORF-DGA-1002-0020 to PKGF-LOG-ORF-DGA-1002-0028
6. FOR CONTROL LINE SETOUT AND DETAILS REFER TO DRAWINGS PKGF-LOG-ORF-DGA-1004-0001 to PKGF-LOG-ORF-DGA-1004-0009

REV	ISSUE DESCRIPTION	DRN	CHK	DES	APR	DATE
6	REISSUED FOR CONSTRUCTION	RS	PM	MM	PD	19.08.22
5	REISSUED FOR CONSTRUCTION	MM	PM	MM	RR	27.07.22
4	ISSUED FOR CONSTRUCTION	SB	PM	MM	PD	08.07.22
3	ISSUED FOR USE	RS	PM	RS	PD	09.06.22
2	ISSUED FOR REVIEW	RS	PM	RS	PD	03.06.22
1	ISSUED FOR CONSTRUCTION	JL	PM	JL	TJ	08.12.21
0	ISSUED FOR INFORMATION	JL	PM	JL	TJ	09.08.21

CERTIFIER NO.: 99434 (NPER-3)
CERTIFYING ENGINEER NAME: P.W. MOODIE

CLIENT: AIE

CONSULTANT: LOGICAMMS a verbrec company

SCALE	1:250 (A1)	
DRN	SB	01.07.22
CHK	PM	01.07.22
DES	MM	01.07.22
APR	PD	01.07.22

PORT KEMBLA GAS TERMINAL PROJECT - CIVIL WORKS
GENERAL ARRANGEMENT PLAN
ACCESS ROADS, PAVEMENTS, STORMWATER DRAINAGE, SIGNS AND LINEMARKING - SHEET 1 OF 5

PKGT-LOG-ORF-CIV-DGA-1002-0004 | 6

Node 13

JOINS DRAWING PKGT-LOG-ORF-CIV-DGA-1002-0004

EARTHWORKS MATCH TO EDGE OF TRENCH GRATE.

CARPARK

INSTALL

EARTHWORKS

EXTENT

CONTROL LINE - Z1

CONTROL LINE - J

R1-2B INSTALL

CONTROL LINE - O

SERVICES CULVERT MANHOLE REFER TO NOTE '#'

INSTALL

R1-2B

PROPOSED

INSTALL BOLLARDS

CONTROL LINE - ROAD 06

ROAD 06

CONTROL LINE - N

ROAD 03

SERVICES CULVERT MANHOLE REFER TO NOTE '#'

APPROXIMATE LOCATION OF SUBSOIL DRAIN INSTALLED IMEDIATELY ADJACENT TO THE EXISTING SITE BOUNDARY RETAINING WALL. REFER TO IMPERVIOUS LAYER DRAINAGE DETAIL ON DRG. 1002-0008 FOR DETAILS

CAPPING

EARTHWORKS BEYOND CAPPING BEAM BY OTHERS.

BEAM

TRENCH DRAIN NORTH

EARTHWORKS MATCH TO EDGE OF TRENCH GRATE.

'TYPE "B/D" STANDARD SUBSURFACE DRAIN REFER TO IPWEA STANDARD DRAWING RS-140

CONTROL LINE - ROAD 3

SUBSOIL CLEANOUT DETAIL REFER TO IPWEA DRAWING RS-142

TOE OF WALL

EXISTING ROAD 09

BY

CONTROL LINE TRENCH DRAIN NTH

OTHERS

SERVICES CULVERT MANHOLE REFER TO NOTE '#'

SUPPLY AND INSTALL 'SPEL' ECOCEPTOR 1500 SERIES - E.240/153030.RCP. REF TO DOCUMENT 'PKGT-LOG-ORF-CIV-DGA-1101-0001.

R1-2B INSTALL

CONTROL LINE - ROAD 05

CONTROL LINE - I

EARTHWORKS

EXTENT OF WORK TO BE AGREED ON SITE WITH AUSTRALIAN INDUSTRIAL ENERGY REPRESENTATIVE

INSTALL BOLLARDS

ROAD 05

CONTROL LINE - K

JOINS DRAWING PKGT-LOG-ORF-CIV-DGA-1002-0006

NOTE:

1. CONTOURS TO FINISHED DESIGN SURFACE LEVEL
2. '#' REFER DETAIL C ON DRAWING PKGF-LOG-ORF-DGA-1003-0011.
3. 'Ω' REFER DETAIL A ON DRAWING PKGF-LOG-ORF-DGA-1003-0011.
4. FOR STORMWATER / SERVICE PIPE LONG SECTIONS REFER TO DRAWINGS PKGF-LOG-ORF-DGA-1100-0001 to PKGF-LOG-ORF-DGA-1100-0005
5. FOR ROAD CROSS SECTIONS REFER TO DRAWINGS PKGF-LOG-ORF-DGA-1002-0020 to PKGF-LOG-ORF-DGA-1002-0028
6. FOR CONTROL LINE SETOUT AND DETAILS REFER TO DRAWINGS PKGF-LOG-ORF-DGA-1004-0001 to PKGF-LOG-ORF-DGA-1004-0009

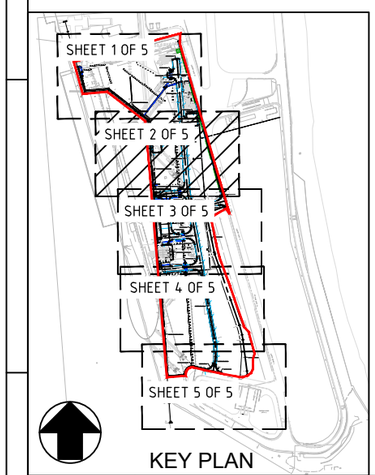

SCALE = 1:250

DRAWINGS SHALL BE READ IN CONJUNCTION WITH DESIGN MODEL

ISSUED FOR CONSTRUCTION

		REV	ISSUE DESCRIPTION	DRN	CHK	DES	APR	DATE
		6	REISSUED FOR CONSTRUCTION	RS	PM	MM	PD	19.08.22
		5	ISSUED FOR CONSTRUCTION WITH HOLDS	MM	PM	MM	RR	27.07.22
		4	ISSUED FOR CONSTRUCTION	SB	PM	MM	PD	08.07.22
		3	ISSUED FOR USE	RS	PM	RS	PD	09.06.22
		2	ISSUED FOR REVIEW	RS	PM	RS	PD	03.06.22
		1	ISSUED FOR CONSTRUCTION	JL	PM	JL	TJ	08.12.21
99434 (NPER-3)	P.W. MOODIE	0	ISSUED FOR INFORMATION	JL	PM	JL	TJ	09.08.21
CERTIFIER NO.	CERTIFYING ENGINEER NAME							

CLIENT

CONSULTANT

SCALE	1:250 (A1)	
DRN	SB	01.07.22
CHK	PM	01.07.22
DES	MM	01.07.22
APR	PD	01.07.22

PORT KEMBLA GAS TERMINAL PROJECT - CIVIL WORKS
GENERAL ARRANGEMENT PLAN
ACCESS ROADS, PAVEMENTS, STORMWATER DRAINAGE, SIGNS AND LINEMARKING - SHEET 2 OF 5

PKGT-LOG-ORF-CIV-DGA-1002-0005 | 6

Node 13

JOINS DRAWING PKGT-LOG-ORF-CIV-DGA-1002-0005

INSTALL BOLLARDS

TRANSITION B1 TO LEVEL.

EARTHWORKS MATCH TO EDGE OF TRENCH GRATE.

EARTHWORKS BEYOND CAPPING BEAM BY OTHERS.

MATCH NEW KERB AND CHANNEL SMOOTHLY INTO EXISTING KERB AND CHANNEL

2.00m2 CEMENT GROUTED ROCK PITCHING TO END OF CHANNEL

TIE INTO EXISTING CONCRETE CHANNEL.

MATCH NEW KERB AND CHANNEL SMOOTHLY INTO EXISTING KERB AND CHANNEL

GRADE EARTHWORK TO TOP BACK OF EXISTING KERB

'TYPE "B/D" STANDARD SUBSURFACE DRAIN REFER TO IPWEA STANDARD DRAWING RS-140

SERVICES CULVERT MANHOLE REFER TO NOTE '#'

SUBSOIL CLEANOUT DETAIL REFER TO IPWEA DRAWING RS-142

SERVICES CULVERT MANHOLE REFER TO NOTE '#'

R1-2B INSTALL

R1-2B INSTALL

R1-2B INSTALL

ROAD 05

ROAD 02

ROAD 07

ROAD 04

ROAD 03

ROAD 01

TRENCH DRAIN NORTH

TRENCH DRAIN SOUTH

PROPOSED CAPPING BEAM BY OTHERS

CONTROL LINE - H

CONTROL LINE - P

CONTROL LINE - Q

CONTROL LINE - R

CONTROL LINE - ROAD 3

CONTROL LINE - F

CONTROL LINE - G

CONTROL LINE - S

CONTROL LINE - E

CONTROL LINE TRENCH DRAIN STH

CONTROL LINE - C

CONTROL LINE - W

CONTROL LINE - E

CONTROL LINE - T2

CONTROL LINE - T

CONTROL LINE - K

CONTROL LINE - J

CONTROL LINE - L

CONTROL LINE - V

DETAIL 1

NOTE:

1. CONTOURS TO FINISHED DESIGN SURFACE LEVEL
2. '#' REFER DETAIL C ON DRAWING PKGF-LOG-ORF-DGA-1003-0011.
3. 'Ω' REFER DETAIL A ON DRAWING PKGF-LOG-ORF-DGA-1003-0011.
4. FOR STORMWATER / SERVICE PIPE LONG SECTIONS REFER TO DRAWINGS PKGF-LOG-ORF-DGA-1100-0001 to PKGF-LOG-ORF-DGA-1100-0005
5. FOR ROAD CROSS SECTIONS REFER TO DRAWINGS PKGF-LOG-ORF-DGA-1002-0020 to PKGF-LOG-ORF-DGA-1002-0028
6. FOR CONTROL LINE SETOUT AND DETAILS REFER TO DRAWINGS PKGF-LOG-ORF-DGA-1004-0001 to PKGF-LOG-ORF-DGA-1004-0009

GPT SLAB SETOUT			
POINT NO.	X COORD	Y COORD	TOP OF SLAB HEIGHT
1	306988.1128	6184826.4743	5.1500
2	306985.8178	6184826.2992	5.1500
3	306985.9910	6184824.0265	5.1500
4	306988.2864	6184824.1987	5.1500

150mm THICK CONCRETE SLAB OVER GPT. REF TO DOCUMENT "PKGT-LOG-ORF-CIV-DGA-1003-0001" AND SETOUT TABLE THIS PLAN

SUPPLY AND INSTALL 'SPEL' ECOCEPTOR 1500 SERIES - E.240/153030.RCP. REF TO DOCUMENT 'PKGT-LOG-ORF-CIV-DGA-1101-0001.

DETAIL 1

SHEET 1 OF 5

SHEET 2 OF 5

SHEET 3 OF 5

SHEET 4 OF 5

SHEET 5 OF 5

KEY PLAN

JOINS DRAWING PKGT-LOG-ORF-CIV-DGA-1002-0007

SCALE = 1:250

DRAWINGS SHALL BE READ IN CONJUNCTION WITH DESIGN MODEL

ISSUED FOR CONSTRUCTION

CERTIFIER NO.	CERTIFYING ENGINEER NAME	REV	ISSUE DESCRIPTION	DRN	CHK	DES	APR	DATE
		6	REISSUED FOR CONSTRUCTION	RS	PM	MM	PD	19.08.22
		5	ISSUED FOR CONSTRUCTION WITH HOLDS	MM	PM	MM	RR	27.07.22
		4	ISSUED FOR CONSTRUCTION	SB	PM	MM	PD	08.07.22
		3	ISSUED FOR USE	RS	PM	RS	PD	09.06.22
		2	ISSUED FOR REVIEW	RS	PM	RS	PD	03.06.22
		1	ISSUED FOR CONSTRUCTION	JL	PM	JL	TJ	08.12.21
99434 (NPER-3)	P.W. MOODIE	0	ISSUED FOR INFORMATION	JL	PM	JL	TJ	09.08.21

CLIENT

CONSULTANT

SCALE	1:250 (A1)	
DRN	SB	01.07.22
CHK	PM	01.07.22
DES	MM	01.07.22
APR	PD	01.07.22

PORT KEMBLA GAS TERMINAL PROJECT - CIVIL WORKS
GENERAL ARRANGEMENT PLAN
ACCESS ROADS, PAVEMENTS, STORMWATER DRAINAGE, SIGNS AND LINEMARKING - SHEET 3 OF 5

PKGT-LOG-ORF-CIV-DGA-1002-0006 | 6

Node 13

JOINS DRAWING PKGT-LOG-ORF-CIV-DGA-1002-0006

INSTALL BOLLARDS

ROAD 01

'#'

CONTROL LINE - E

SERVICES CULVERT MANHOLE REFER TO NOTE '#'

EARTHWORKS BEYOND CAPPING BEAM BY OTHERS.

PROPOSED CAPPING BEAM BY OTHERS

TRENCH DRAIN SOUTH

EARTHWORKS MATCH TO EDGE OF TRENCH GRATE.

CONTROL LINE TRENCH DRAIN STH

ROAD 03

'TYPE "B/D" STANDARD SUBSURFACE DRAIN REFER TO IPWEA STANDARD DRAWING RS-140

SUBSOIL CLEANOUT DETAIL REFER TO IPWEA DRAWING RS-142

CONTROL LINE - ROAD 3

EXISTING ROAD 09

EARTHWORKS

REINSTATE KERB AND CHANNEL

EXISTING ROAD 09

EXTENT

TC186.296

CT206.800

CT44.783

NOTE:

1. CONTOURS TO FINISHED DESIGN SURFACE LEVEL
2. '#' REFER DETAIL C ON DRAWING PKGF-LOG-ORF-DGA-1003-0011.
3. 'Ω' REFER DETAIL A ON DRAWING PKGF-LOG-ORF-DGA-1003-0011.
4. FOR STORMWATER / SERVICE PIPE LONG SECTIONS REFER TO DRAWINGS PKGF-LOG-ORF-DGA-1100-0001 to PKGF-LOG-ORF-DGA-1100-0005
5. FOR ROAD CROSS SECTIONS REFER TO DRAWINGS PKGF-LOG-ORF-DGA-1002-0020 to PKGF-LOG-ORF-DGA-1002-0028
6. FOR CONTROL LINE SETOUT AND DETAILS REFER TO DRAWINGS PKGF-LOG-ORF-DGA-1004-0001 to PKGF-LOG-ORF-DGA-1004-0009

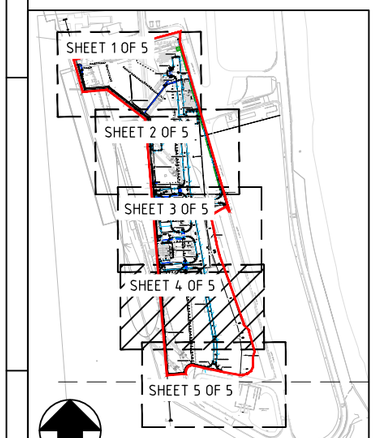

KEY PLAN

JOINS DRAWING PKGT-LOG-ORF-CIV-DGA-1002-0008

SCALE = 1:250

DRAWINGS SHALL BE READ IN CONJUNCTION WITH DESIGN MODEL

ISSUED FOR CONSTRUCTION

		5	REISSUED FOR CONSTRUCTION	RS	PM	MM	PD	19.08.22
		4	ISSUED FOR CONSTRUCTION	SB	PM	MM	PD	08.07.22
		3	ISSUED FOR USE WITH HOLDS	SB	PM	MM	PD	09.06.22
		2	ISSUED FOR CLIENT REVIEW	SB	PM	MM	PD	03.06.22
		1	DESIGN SURFACE UPDATED	RS	PM		TJ	08.12.21
99434 (NPER-3)	P.W. MOODIE	0	ISSUED FOR CONSTRUCTION	JL	PM	JL	TJ	09.08.21
CERTIFIER NO.	CERTIFYING ENGINEER NAME	REV	ISSUE DESCRIPTION	DRN	CHK	DES	APR	DATE

CLIENT

CONSULTANT

SCALE	1:250 (A1)	
DRN	SB	01.07.22
CHK	PM	01.07.22
DES	MM	01.07.22
APR	PD	01.07.22

PORT KEMBLA GAS TERMINAL PROJECT - CIVIL WORKS
GENERAL ARRANGEMENT PLAN
ACCESS ROADS, PAVEMENTS, STORMWATER DRAINAGE, SIGNS AND LINEMARKING - SHEET 4 OF 5

PKGT-LOG-ORF-CIV-DGA-1002-0007 | 5

Node 13

JOINS DRAWING PKGT-LOG-ORF-CIV-DGA-1002-0007

EARTHWORKS MATCH TO EDGE OF TRENCH GRATE.

PROPOSED CAPPING BEAM BY OTHERS.

EARTHWORKS BEYOND CAPPING BEAM BY OTHERS.

TRENCH DRAIN SOUTH

CONTROL LINE - ROAD 08

CONTROL LINE - A

ROAD 03

'TYPE "B/D" STANDARD SUBSURFACE DRAIN REFER TO IPWEA STANDARD DRAWING RS-140

CONTROL LINE - ROAD 3

SUBSOIL CLEANOUT DETAIL REFER TO IPWEA DRAWING RS-142

TC6.685

CONTROL LINE - B

EARTHWORKS ROAD 08

-0.248

'#'

EXTENT

EXISTING ROAD

EARTHWORKS

CONTROL LINE - ROAD 3

EXTENT

EXISTING ROAD 9

8 STH

9 STH

10 STH

11 STH

12 STH

272.944

251.153

255.278

1800 DIA ACCESS CHAMBER REFER DRAWING NOs. PKGT-LOG-ORF-CIV-DGA-1003-0004 & PKGT-LOG-ORF-CIV-DGA-1003-0005

1800 DIA ACCESS CHAMBER REFER DRAWING NOs. PKGT-LOG-ORF-CIV-DGA-1003-0004 & PKGT-LOG-ORF-CIV-DGA-1003-0005

INSTALL

GIVE WAY

R1-2B

1800 DIA ACCESS CHAMBER REFER DRAWING NOs. PKGT-LOG-ORF-CIV-DGA-1003-0004 & PKGT-LOG-ORF-CIV-DGA-1003-0005

JOIN TO EXISTING GULLY PIT CHAMBER

EXISTING POND (CELL 1)

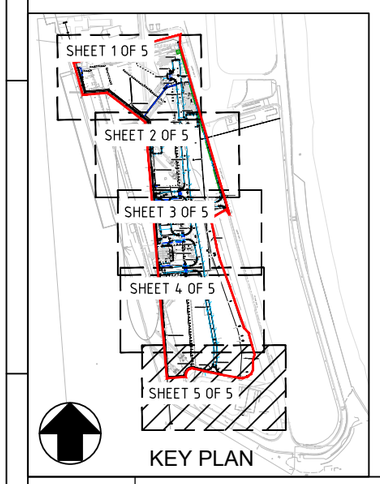

KEY PLAN

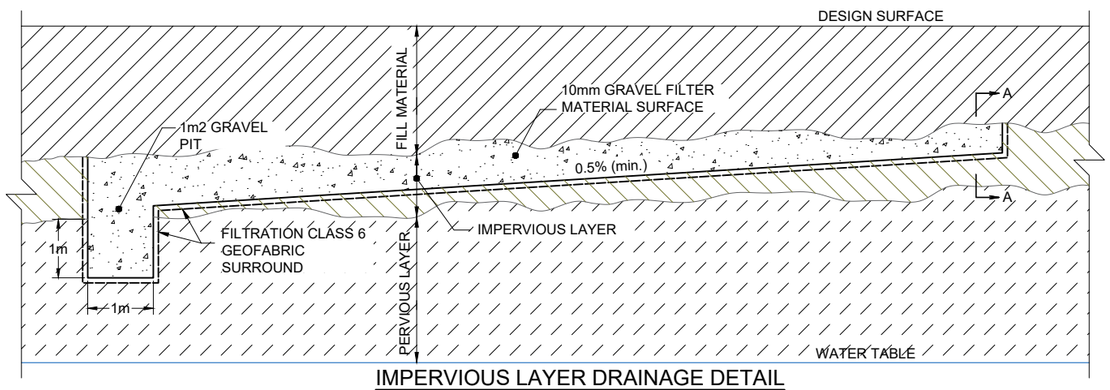

IMPERVIOUS LAYER DRAINAGE DETAIL

NTS

10mm GRAVEL FILTER MATERIAL

A.S. SIEVE SIZE	% BY WT. PASS 'G
9.50 mm	100
4.75 mm	90 - 100
1.18 mm	45 - 80
300 µm	10 - 30
150 µm	0 - 10
75 µm	0 - 1

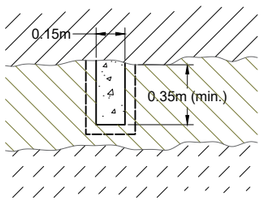

SECTION A-A

NOTE:

1. CONTOURS TO FINISHED DESIGN SURFACE LEVEL
2. '#' REFER DETAIL C ON DRAWING PKGF-LOG-ORF-DGA-1003-0011.
3. 'Q' REFER DETAIL A ON DRAWING PKGF-LOG-ORF-DGA-1003-0011.
4. FOR STORMWATER / SERVICE PIPE LONG SECTIONS REFER TO DRAWINGS PKGF-LOG-ORF-DGA-1100-0001 to PKGF-LOG-ORF-DGA-1100-0005
5. FOR ROAD CROSS SECTIONS REFER TO DRAWINGS PKGF-LOG-ORF-DGA-1002-0020 to PKGF-LOG-ORF-DGA-1002-0028
6. FOR CONTROL LINE SETOUT AND DETAILS REFER TO DRAWINGS PKGF-LOG-ORF-DGA-1004-0001 to PKGF-LOG-ORF-DGA-1004-0009

10 0 10m

SCALE = 1:250

DRAWINGS SHALL BE READ IN CONJUNCTION WITH DESIGN MODEL

ISSUED FOR CONSTRUCTION

CERTIFIER NO.	CERTIFYING ENGINEER NAME	REV	ISSUE DESCRIPTION	DRN	CHK	DES	APR	DATE
		5	REISSUED FOR CONSTRUCTION	RS	PM	MM	PD	19.08.22
		4	ISSUED FOR CONSTRUCTION	SB	PM	MM	PD	08.07.22
		3	ISSUED FOR USE WITH HOLDS	SB	PM	MM	PD	09.06.22
		2	ISSUED FOR CLIENT REVIEW	SB	PM	MM	PD	03.06.22
		1	DESIGN SURFACE UPDATED	RS	PM	RS	TJ	08.12.21
99434 (NPER-3)	P.W. MOODIE	0	ISSUED FOR CONSTRUCTION	JL	PM	JL	TJ	09.08.21

CLIENT: AIE

CONSULTANT: LOGICAMMS a verbrec company

SCALE	1:250 (A1)	
DRN	SB	01.07.22
CHK	PM	01.07.22
DES	MM	01.07.22
APR	PD	01.07.22

PORT KEMBLA GAS TERMINAL PROJECT - CIVIL WORKS
GENERAL ARRANGEMENT PLAN
ACCESS ROADS, PAVEMENTS, STORMWATER DRAINAGE, SIGNS AND LINEMARKING - SHEET 5 OF 5

PKGT-LOG-ORF-CIV-DGA-1002-0008 | 5

Appendix F. FMEA Minutes (MLA Hydraulics)

Components/Subsystems	Function	Failure Mode	Failure Causes	Failure Detection	Failure Effects	Mitigation Measures	Recommendations	Comments
Motor/pump group 5.1/6.1 , 5.2/6.2	Generates hydraulic power	Motor fails to start when called upon	Power failure	Digital Input to PLC to indicate motor failure	Inability to operate MLA (movement or emergency shutdown and disconnection)	Back up accumulators, hand operated hydraulic pump		Note, HPU pumps are not supplied with emergency power.
Motor/pump group 5.1/6.1 , 5.2/6.3	Generates hydraulic power	Motor fails to start when called upon	Contactor failure or digital output card malfunction, mechanical pump failure	Digital Input to PLC to indicate motor failure	Inability to operate MLA (movement or emergency shutdown and disconnection)	Back up accumulators, hand operated hydraulic pump, redundant motor/pump group, pumps are not on same digital output card		
Pressure filter 47	Removes contaminants from hydraulic fluid	Pressure filter clogged	Contaminants entering hydraulic system via filter pressure relief bypass	6-monthly maintenance includes inspection of filter internals	Extended pump running duration to maintain pressure in accumulators	Redundant filter (manual changeover), closed system (contamination is not anticipated)		
Pressure filter 47	Removes contaminants from hydraulic fluid	Pressure filter clogged	Contaminants in hydraulic fluid	6-monthly maintenance includes inspection of filter internals	Reduced pressure in the system and potential failure of filter	All components designed for a minimum of 1.5 design pressure, upstream pressure relief valve set at 200		

Components/Subsystems	Function	Failure Mode	Failure Causes	Failure Detection	Failure Effects	Mitigation Measures	Recommendations	Comments
						bar, closed system (contamination is not anticipated)		
Flow control valve 21	Controls the flow in the system	The flow control valve failed to operate when required	Failure of the control coil (will remain in present position at time of failure)	Visual detection MLA movement, PMS	MLA move at higher or lower speed than specified	None		Not a critical parameter for functionality of the MLAs Mechanical override screw on coil discussed and not considered necessary in this application.

Components/Subsystems	Function	Failure Mode	Failure Causes	Failure Detection	Failure Effects	Mitigation Measures	Recommendations	Comments
System pressure and circulation valve 20	Directional valve which enables hydraulic fluid flow to the system	Valve fails to switch when required	Coil/spool failure	Visual detection (lack of MLA movement), PMS	MLA cannot be moved, system cannot maintain pressure in accumulators preventing ESD actions	Minimum pressure in accumulator will still allow for emergency disconnection, operation of freewheeling valves is independent from the system pressure, low pressure alarm in accumulators set at 170 bar (will alarm if pressure not restored to 190 bar within 5 minutes)		
Control pressure valve 24.2	Reduces pressure in the system to allow selection between control and freewheeling operation	Valve fails to supply correct pressure to the system	Spring/spool failure	Visual detection (lack of MLA movement) (PMS), pressure gauge 57 indicates incorrect pressure	Arm will remain in freewheel position, MLA cannot be moved	Valve override (MS block item 10 and 11) allows for MLA positioning to be set to control mode manually		
Arm control valve 16	Enables hydraulic power supply to move MLA when in control mode	Valve fails to operate when required	Coil/spool failure	Visual detection (lack of MLA movement), PMS	MLA cannot be moved	Manual override valve item 16 for manual positioning		

Components/Subsystems	Function	Failure Mode	Failure Causes	Failure Detection	Failure Effects	Mitigation Measures	Recommendations	Comments
Freewheeling valves primary/secondary arm , 11	Enables/disables freewheeling of the arm	Valve fails to operate when required	Spool failure	Visual detection (lack of MLA movement), PMS	MLA cannot be moved (remains in freewheel)	Valve override (MS block item 11) allows for MLA positioning manually		
TSA/Arm slew freewheeling valves, 10	Enables/disables free slewing of the arm	Valve fails to operate when required	Spool failure	Visual detection (lack of MLA/TSA movement), PMS	MLA/TSA cannot be moved	Valve override (MS block item 10) allows for MLA positioning manually		
Arm slew directional valve, 18	Directs the flow to slew secondary arm	Valve fails to operate when required	Coil/spool failure	Visual detection MLA movement, PMS	Secondary arm cannot be slewed	Manual override valve item 18 for manual positioning		
TSA slew directional valve , 18	Directs the flow to slew the TSA	Valve fails to operate when required	Coil/spool failure	Visual detection TSA movement, PMS	TSA cannot be slewed	Manual override valve item 18 for manual positioning		
QC/DC coupling directional valve, 22	Enables actuation of the QC/DC coupling	Valve fails to operate when required	Coil/spool failure	Proximity sensor ZSL-021003 will indicate that quick disconnect remains closed	QC/DC cannot be actuated, inability to disconnect MLA when required potentially leading to arm damage	Manual override release (item 25-2)		
MLA Blowdown directional valve, 16	Enables actuation of the blowdown valves	Valve fails to operate when required	Coil/spool failure	Pressure transmitter PT-021053/021055 will indicate that	QC/DC cannot be actuated due to residual pressure in MLA	Manual override release (item 25-1), ESD and blowdown activation		Manually initiated ESD will not allow disconnection at pressure.

Components/Subsystems	Function	Failure Mode	Failure Causes	Failure Detection	Failure Effects	Mitigation Measures	Recommendations	Comments
				blowdown has not functioned, proximity sensor ZSL-021054 and ZSL-021056 will indicate blowdown valves have not opened	connection spool, inability to disconnect when required potentially leading to MLA damage and small release of flammable material	ESD 2 initiated by MLA out of working envelope will allow disconnection at pressure, provided ESD valves are closed		
MLA ESD shore valve, 16	Enables actuation of the ESD shore valve	Valve fails to operate when required	Coil/spool failure	Proximity sensor ZSH-021005 indicates valve has failed to close	ESD valve shore cannot be closed. QC/DC cannot be actuated, inability to disconnect when required potentially leading to MLA damage and large release of flammable material	Manual override release (item 25-1), ESD and blowdown activation Isolation valve onshore and FSRU will close on signal (upstream and downstream of MLA valves) limiting size of potential release		Note, failure when disconnected will prevent recommissioning. This is an operability issue and considered less significant than failure on demand.
MLA ESD ship valve, 16	Enables actuation of the ESD ship valve	Valve fails to operate when required	Coil/spool failure	Proximity sensor ZSH-021001 indicates valve	ESD valve ship cannot be closed. QC/DC	Manual override release (item 25-1), ESD and blowdown		

Components/Subsystems	Function	Failure Mode	Failure Causes	Failure Detection	Failure Effects	Mitigation Measures	Recommendations	Comments
				has failed to close	cannot be actuated, inability to disconnect when required potentially leading to MLA damage and large release of flammable material	activation Isolation valve onshore and FSRU will close on signal (upstream and downstream of MLA valves) limiting size of potential release		
Hydraulic hose to ship side ESD valve	Provide hydraulic actuation to ESD ship valve	Breach of hose	Mechanical damage	Likely to be detected by personnel in the area (cause of breach) leading to discharge of hydraulic fluid	Inability to actuate ship ESD valve when required	Isolation on FSRU upstream of MLA valves, restriction of personnel in area		
Hydraulic hose to ship side ESD valve	Provide hydraulic actuation to ESD ship valve	Disconnection of breakaway coupling	Excessive strain on hydraulic hose	Likely to be detected by personnel in the area (cause of strain)	Inability to actuate ship ESD valve when required	Isolation on FSRU upstream of MLA valves, restriction of personnel in area		
Accumulator pressure switch, 10.2, 10.3	Sends signal to start the motors to maintain pressure	Pressure switch fails to activate	Pressure sensing device broken	Pressure gauge 57 indicates drop of pressure	Reduced pressure in accumulator, reduced capacity	Manually operated pump, redundant hydraulic pumps. Maintenance		

Components/Subsystems	Function	Failure Mode	Failure Causes	Failure Detection	Failure Effects	Mitigation Measures	Recommendations	Comments
	in back up accumulators				to undertake ESD functions if main hydraulic pumps are not operable	procedures include testing of pressure switches, accumulator capacity allows for multiple ESD events		
Accumulator pressure switch, 10.2, 10.3	Sends signal to start the motors to maintain pressure in back up accumulators	Pressure switch fails at low pressure	Broken diaphragm or spring	Can be inferred through continuous pump running signal and accumulator failure to reach pressure signal	Pumps running continuously leading to heat built up in hydraulic reservoir leading to HPU component damage	Thermal switch (TS01) will trip pumps		
Thermal switch TS01	Triggers an alarm if temperature exceeds 70°C	Thermal switch fails to activate	Loose connection	Periodic function testing	Failure to trip on high temperature, leading to HPU damage	None		Highly unlikely given the HPU only running for limited amount of time and operating at ambient temperature

Components/Subsystems	Function	Failure Mode	Failure Causes	Failure Detection	Failure Effects	Mitigation Measures	Recommendations	Comments
Hydraulic reservoir	Contains hydraulic fluid required for control functions	Loss of inventory	Oil leak	Level gauge	Pump damage, inability to operate MLA (movement or emergency shutdown and disconnection)	Oil level switch (LS01) turns off pumps, accumulator for ESD, hand pump		Note, ESD2 will override low level switch and will attempt to operate HPU pumps. Pumps will attempt to maintain system pressure, eventually depleting hydraulic oil reservoir.
Oil level switch LS01	Triggers an alarm if oil level drops below minimum level	Oil level switch fails to activate	Misplaced reed switch/Loose connection	Periodic function testing	Pump operation on low level leading to pump damage	None		

Appendix G. FMEA Master P&IDs

CNG LOADING ARM
MLA-101 A: 12"

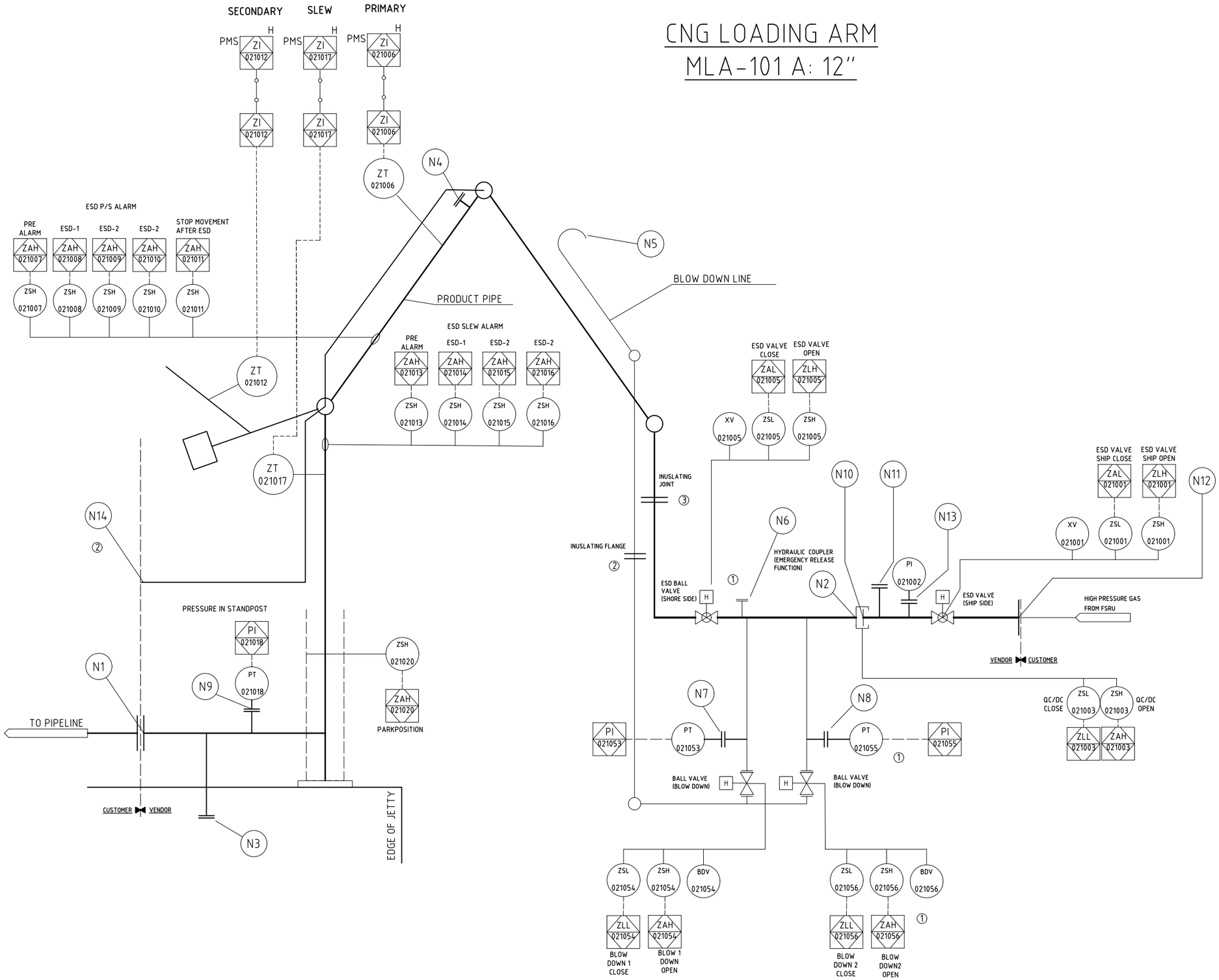

Electrical Plan: M4734463-220 / PKGT-EMC-BTH-ELE-SLD-0001 ②

Hydraulical Plan: M4734463-230 / PKGT-EMC-BTH-CIV-DWG-0002

LIST OF CONNECTIONS ON MARINE LOADING ARM

Stutzen Nr. *CONNECT'N NO.*	DN *SIZE*	PN *PRESSURE*	Dichtflaeche *FLANGE FACING*	Type *TYPE OF FLANGES*	Bemerkungen *REMARKS*
N1	12"	900 LBS.	W.N. R.F.	FLANGE	OUTLET FLANGE
N2	12"	-	-	SPECIAL FLANGE	HYDRAULIC COUPER (=EMERGENCY RELEASE COUPLER)
N3	2"	900 LBS.	W.N. R.F.	FLANGE + BLIND	PURGE CONNECTION AT RISER BOTTOM
N4	2"	900 LBS.	W.N. R.F.	FLANGE +BLIND	VENT (FOR PIPING PRESSURE TEST WITH FLUID)
N5	2"	-	-	OUTLET, OPEN PIPE	BLOW DOWN AND PURGE OUTLET TO ENVIROMENT
N6	2"	900 LBS.	W.N. R.F.	FLANGE +BLIND	MULTI FUNCTION NOZZLE
N7	1"	900 LBS.	W.N. R.F.	FLANGE + BLIND	FOR PRESSURE TRANSMITTER INCLUDING BLOCK AND BLEED VALVE
N8	1"	900 LBS.	W.N-R.F.	FLANGE +BLIND	FOR PRESSURE TRANSMITTER INCLUDING BLOCK AND BLEED VALVE
N9	1"	900 LBS.	W.N. R.F.	FLANGE +BLIND	FOR PRESSURE TRANSMITTER INCLUDING BLOCK AND BLEED VALVE
N14	12x1.5 mm^2			OPEN PIPE	LEKAGE DETECTION LINE (SERIAL) FOR BASE-, FULCRUM- AND APEX SWIVEL

LIST OF CONNECTIONS ON SPOOL PIECE

Stutzen Nr. *CONNECT'N NO.*	DN *SIZE*	PN *PRESSURE*	Dichtflaeche *FLANGE FACING*	Type *TYPE OF FLANGES*	Bemerkungen *REMARKS*
N10	12"	-	-	SPECIAL FLANGE	COUNTERFLANGE FOR HYDRAULIC COUPLER
N11	2"	900 LBS.	W.N. R.F.	FLANGE +BLIND	MULTI FUNCTION NOZZLE
N12	16"	900 LBS.	W.N. R.T.J	FLANGE	CONNECTION TO SHIP PIPING
N13	1"	900 LBS.	W.N. R.F.	FLANGE	PRESSURE GAUGE MANOMETER INCLUDING BLOCK AND BLEED VALVE

LEGEND:
- ○ = FIELD INSTRUMENT
- ⋈ = BALL VALVE
- PT = PRESSURE TRANSMITTER
- PI = PRESSURE INDICATOR
- → = FLOW OF N2 DURING PURGING

PROPOSED NITROGEN VOLUME FOR PURGING:

Notes

1. EMERGENCY BLOW DOWN VALVES ARE TO OPEN BEFORE PRESSURE IS ABLE TO ESCAPE VIA THE QC/DC FLANGE.
2. ALL VALVES ARE FULL BORE.

MLA-101 A : 12" CNG (RH DESIGN)
MLA-101 B : 12" CNG (RH DESIGN)
MLA-101 C : 12" CNG FUTURE (LH DESIGN)

CUSOTMER DOC No.: PKGT-EMC-BTH-PIP-PID-0001 ①

EMCO WHEATON
A Gardner Denver Product

Emco Wheaton GmbH
35274 Kirchhain, Germany

	DATUM	NAME	MATERIAL
GEZ/ DRW			
GEP/ CHD	27.08.2021	ak-ab	GEWICHT /WEIGHT
FORMAT/ SIZE	A1		
MASSTAB SCALE	1:1		

PIPING & INSTRUMENTATION DIAGRAM
CNG LOADING ARMS 12"
12" HP

FÜR DIESE ZEICHNUNG BEHALTEN WIR UNS ALLE RECHTE VOR.
THIS DRAWING IS THE PROPERTY OF EMCO WHEATON GMBH.
UNAUTHORISED USE WILL RENDER THE USER LIABLE TO LEGAL ACTION

ZEICHN.NR. /DRWG.NO. M4734463-250

ERSATZ FÜR:
ENTST. AUS:

REV	ÄNDERG.	DATUM
3	EMCO/CUST	05.10.2021
2	EMCO/CUST	22.09.2021
1	EMCO/CUST	16.09.2021

CNG LOADING ARM
MLA-101 B: 12"

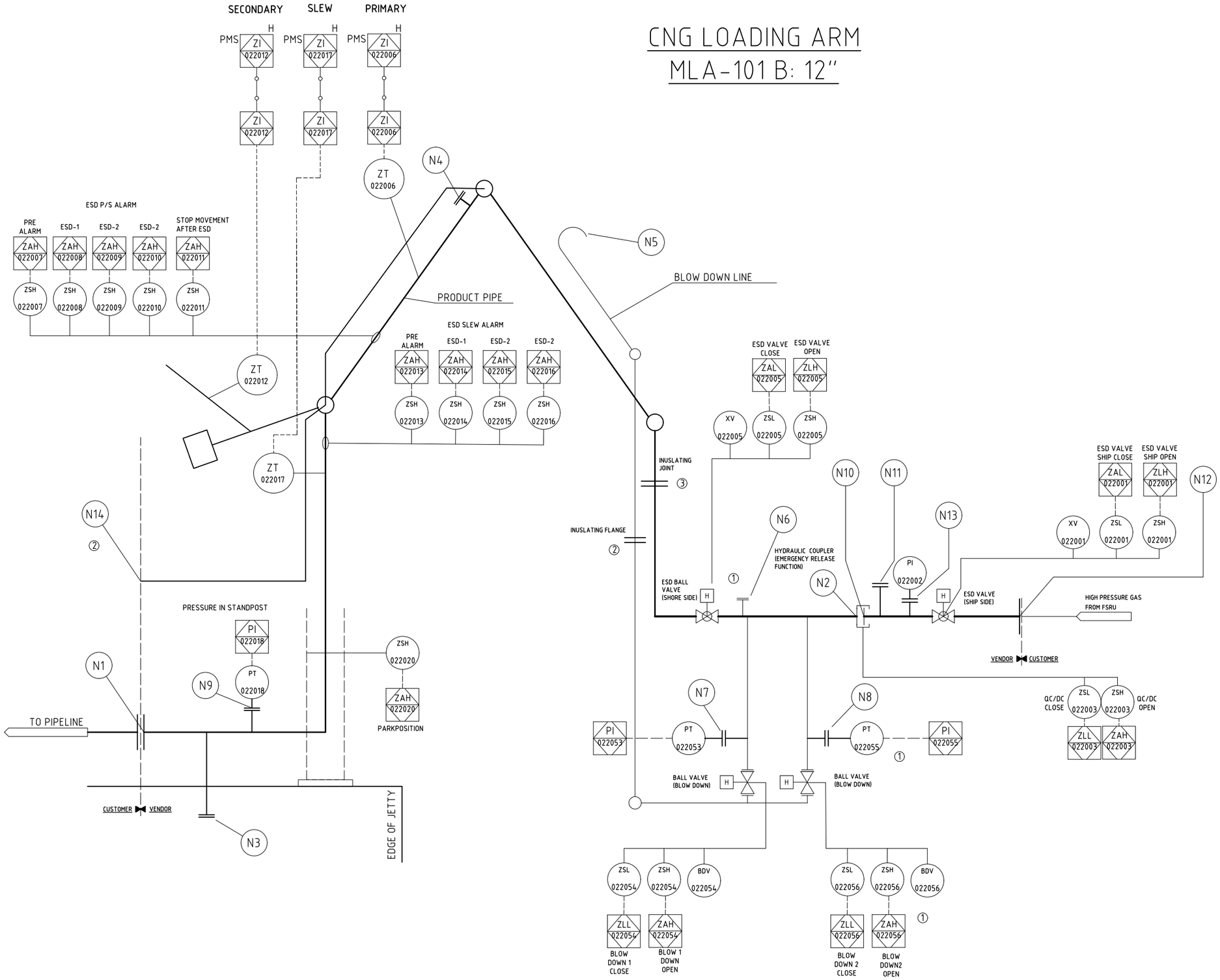

Electrical Plan: M4734463-220 / PKGT-EMC-BTH-ELE-SLD-0001

②

Hydraulical Plan: M4734463-230 / PKGT-EMC-BTH-CIV-DWG-0002

LIST OF CONNECTIONS ON MARINE LOADING ARM

Stutzen Nr. *CONNECT'N NO.*	DN *SIZE*	PN *PRESSURE*	Dichtflaeche *FLANGE FACING*	Type *TYPE OF FLANGES*	Bemerkungen *REMARKS*
N1	12"	900 LBS.	W.N. R.F.	FLANGE	OUTLET FLANGE
N2	12"	-	-	SPECIAL FLANGE	HYDRAULIC COUPER (=EMERGENCY RELEASE COUPLER)
N3	2"	900 LBS.	W.N. R.F.	FLANGE + BLIND	PURGE CONNECTION AT RISER BOTTOM
N4	2"	900 LBS.	W.N. R.F.	FLANGE +BLIND	VENT (FOR PIPING PRESSURE TEST WITH FLUID)
N5	2"	-	-	OUTLET, OPEN PIPE	BLOW DOWN AND PURGE OUTLET TO ENVIROMENT
N6	2"	900 LBS.	W.N. R.F.	FLANGE +BLIND	MULTI FUNCTION NOZZLE
N7	1"	900 LBS.	W.N. R.F.	FLANGE + BLIND	FOR PRESSURE TRANSMITTER INCLUDING BLOCK AND BLEED VALVE
N8	1"	900 LBS.	W.N-R.F.	FLANGE +BLIND	FOR PRESSURE TRANSMITTER INCLUDING BLOCK AND BLEED VALVE
N9	1"	900 LBS.	W.N. R.F.	FLANGE +BLIND	FOR PRESSURE TRANSMITTER INCLUDING BLOCK AND BLEED VALVE
N14	12x1.5 mm^2			OPEN PIPE	LEKAGE DETECTION LINE (SERIAL) FOR BASE-, FULCRUM- AND APEX SWIVEL

LIST OF CONNECTIONS ON SPOOL PIECE

Stutzen Nr. *CONNECT'N NO.*	DN *SIZE*	PN *PRESSURE*	Dichtflaeche *FLANGE FACING*	Type *TYPE OF FLANGES*	Bemerkungen *REMARKS*
N10	12"	-	-	SPECIAL FLANGE	COUNTERFLANGE FOR HYDRAULIC COUPLER
N11	2"	900 LBS.	W.N. R.F.	FLANGE +BLIND	MULTI FUNCTION NOZZLE
N12	16"	900 LBS.	W.N. R.T.J	FLANGE	CONNECTION TO SHIP PIPING
N13	1"	900 LBS.	W.N. R.F.	FLANGE	PRESSURE GAUGE MANOMETER INCLUDING BLOCK AND BLEED VALVE

LEGEND:

- ○ = FIELD INSTRUMENT
- ⋈ = BALL VALVE
- PT = PRESSURE TRANSMITTER
- PI = PRESSURE INDICATOR
- → = FLOW OF N2 DURING PURGING

PROPOSED NITROGEN VOLUME FOR PURGING:

Notes

1. EMERGENCY BLOW DOWN VALVES ARE TO OPEN BEFORE PRESSURE IS ABLE TO ESCAPE VIA THE QC/DC FLANGE.
2. ALL VALVES ARE FULL BORE.

MLA-101 A : 12" CNG (RH DESIGN)
MLA-101 B : 12" CNG (RH DESIGN)
MLA-101 C : 12" CNG FUTURE (LH DESIGN)

CUSOTMER DOC No.: PKGT-EMC-BTH-PIP-PID-0001 ①

EMCO WHEATON
A Gardner Denver Product

Emco Wheaton GmbH
35274 Kirchhain, Germany

	DATUM	NAME	MATERIAL
GEZ/ DRN			
GEP/ CHD	27.08.2021	akab	GEWICHT /WEIGHT
FORMAT/ SIZE	A1		

FÜR DIESE ZEICHNUNG BEHALTEN WIR UNS ALLE RECHTE VOR.
THIS DRAWING IS THE PROPERTY OF EMCO WHEATON GMBH.
UNAUTHORISED USE WILL RENDER THE USER LIABLE TO LEGAL ACTION

MASSTAB SCALE 1:1

PIPING & INSTRUMENTATION DIAGRAM
CNG LOADING ARMS 12"
12" HP

ZEICHN.NR. /DRWG.NO. M4734463-250

ERSATZ FÜR:
ENTST. AUS:

REV	ÄNDERG.	DATUM
3	EMCO/CUST	05.10.2021
2	EMCO/CUST	22.09.2021
1	EMCO/CUST	16.09.2021

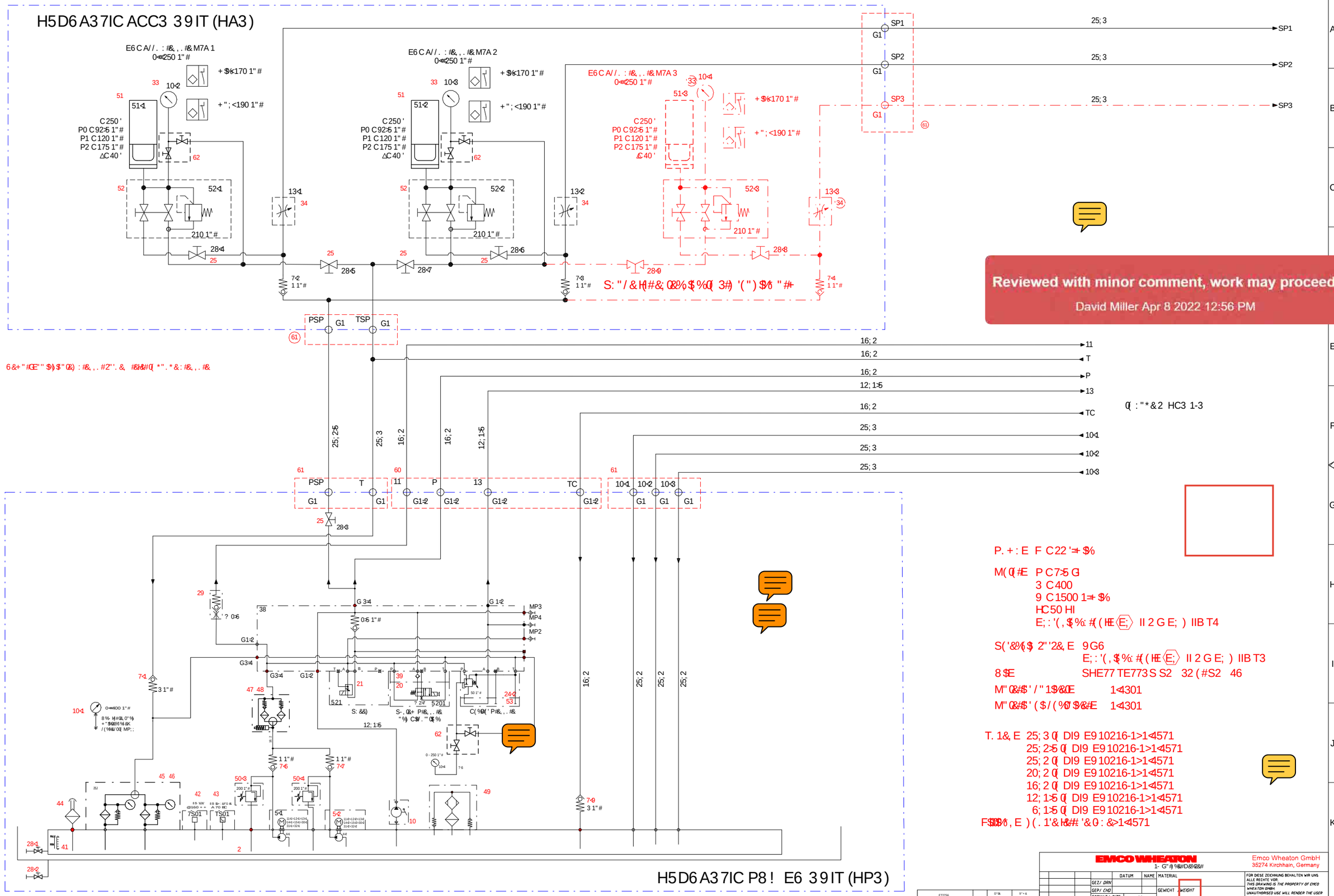
H5D6A37IC ACC3 39IT (HA3)
E6CA/. :#&,.#&M7A1
E6CA/. :#&,.#&M7A2
E6CA/. :#&,.#&M7A3
C250'
P0 C92-5 1"#
P1 C120 1"#
P2 C175 1"#
ΔC40'
210 1"#
SP1
SP2
SP3
G1
25; 3
PSP
TSP
T
P
TC
11
13
16; 2
12; 1-5
25; 2-5
H5D6A37IC P8! E6 39IT (HP3)
MP3
MP4
MP2
Reviewed with minor comment, work may proceed
David Miller Apr 8 2022 12:56 PM
EMCO WHEATON
Emco Wheaton GmbH
35274 Kirchhain, Germany
HP3 4 HA3
M4734463-230
PKGT-EMC-BTH-CI -DI G-0002
fiedler
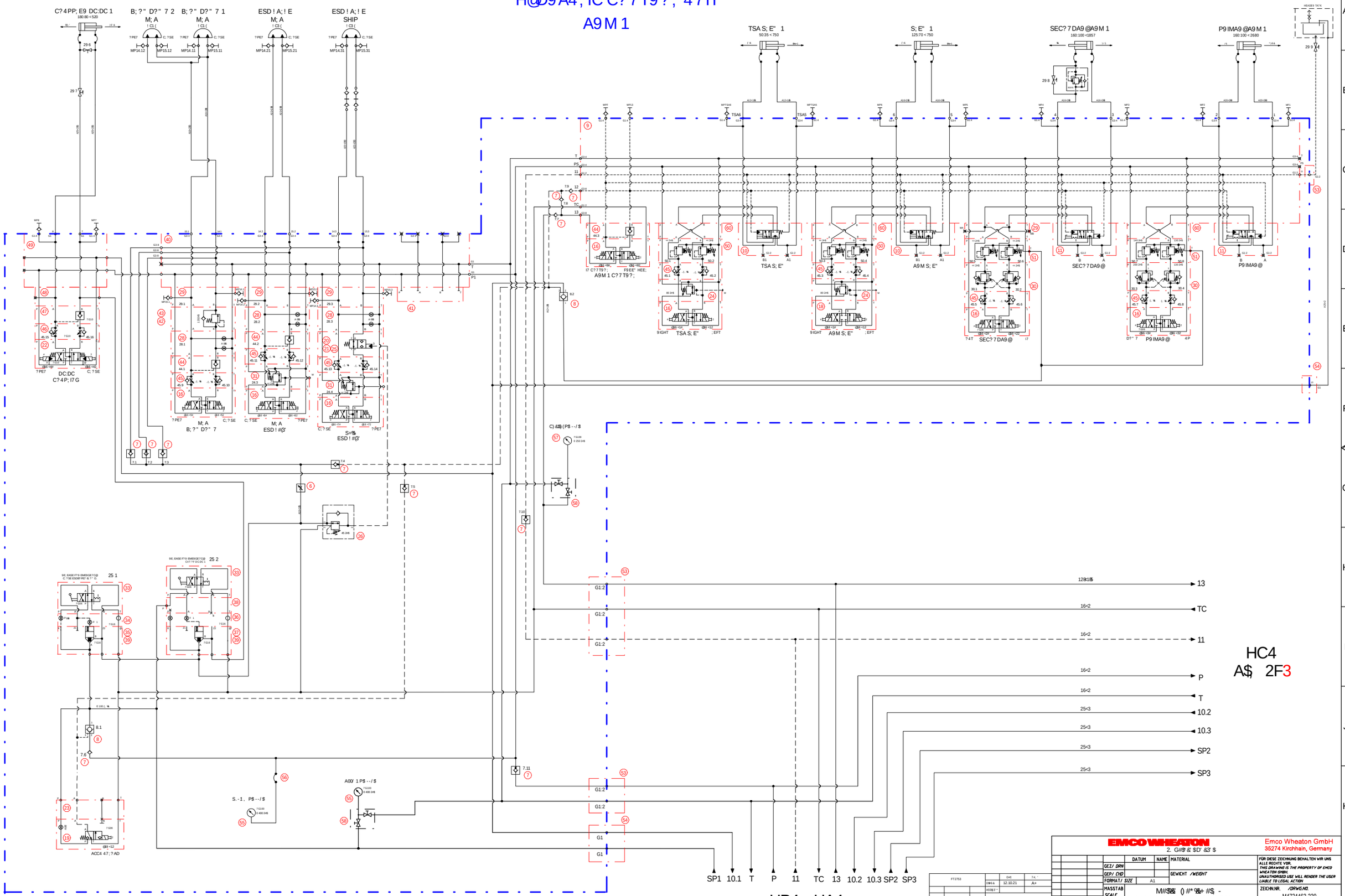
H@D9 A4; IC C?7T9?; 47IT
A9M 1